Agenzia nazionale per le nuove tecnologie,
l'energia e lo sviluppo economico sostenibile

MINISTERO DELLO SVILUPPO ECONOMICO

2013 Advances in the Manufacturing Activities for the Supply of 9 TF Coils of JT-60SA Tokamak and Associated Validation Program

Antonio Cucchiaro, Gian Mario Polli

Report RdS/2013/185

2013 ADVANCES IN THE MANUFACTURING ACTIVITIES FOR THE SUPPLY OF 9 TF COILS OF JT-60SA TOKAMAK AND ASSOCIATED VALIDATION PROGRAM

A. Cucchiaro (ENEA), G.M. Polli (ENEA)

Settembre 2013

Report Ricerca di Sistema Elettrico

Accordo di Programma Ministero dello Sviluppo Economico - ENEA
Piano Annuale di Realizzazione 2012
Area: Produzione di Energia Elettrica e Protezione dell'Ambiente
Progetto: Energia Nucleare – Attività di Fisica della Fusione Complementari a ITER
Obiettivo: Macchina JT60SA: Fornitura di 9 moduli di magnete di campo toroidale
Responsabile del Progetto: Aldo Pizzuto, ENEA

Summary

ABSTRACT 4

1 INTRODUCTION 5

2 DESCRIPTION OF ACTIVITIES AND RESULTS 5

2.1 ENGINEERING ACTIVITIES 5
2.2 WINDING LINE COMMISSIONING 6
2.3 TOOLING DESIGN AND COMMISSIONING 14
2.3.1 Pre-bending tooling for He inlet 14
2.3.2 Transportation frame 14
2.3.3 Tooling for WP insertion into coil casing 16
2.3.4 Tooling for in-case impregnation and curing 18
2.4 QUALIFICATION ACTIVITIES 19
2.4.1 Casing mock-up welding 19
2.4.2 Electrical breaker 23
2.4.3 Electrical inner joint and terminations 25
2.4.4 Electrical measurements of superconducting strands 26

3 CONCLUSIONS 26

4 REFERENCES 26

5 LIST OF ATTACHMENTS 27

6 ABBREVIATIONS AND ACRONYMS 28

Abstract

The present report describes the status of manufacturing, under ENEA responsibility, of 9 of the 18 Toroidal Field (TF) coils of the JT-60SA tokamak . The activity, carried out in the framework of the Broader Approach Agreement between Europe and Japan for the construction of the JT-60SA tokamak, has officially started on October 2011 after the kick-off meeting between ENEA and ASG superconductors in Genoa. The 9 coils are being manufactured under the supervision of ENEA in collaboration with the JT-60SA European home team by ASG superconductors. The remaining coils will be constructed by ENEA's French counterpart CEA. Once completed, the coils will be delivered to CEA at Saclay, France, to perform the cold tests before final shipping to Naka, Japan. The manufacturing consists of several steps and phases. The first phase regards the completion of the manufacturing drawing and components needed for the production that was initiated during the first year and it is now almost completed. Therefore the first year of activity has been devoted to the issuing of the manufacturing drawings and procurement of the tools. In the second year, here reported, the commissioning of the several tooling designed and manufactured has been achieved. Also most of the qualification phase foreseen in the technical specification of the contract has been completed.

1 Introduction

The JT-60SA tokamak will be equipped with a complex magnet system that comprises toroidal and poloidal field (TF and PF respectively) coils. The 18 TF coils foreseen will be procured by Europe: 9 by Italy, under ENEA responsibility, and 9 by France with ENEA French counterpart, CEA. Each coil is superconducting in order to generate the high magnetic field requested to confine plasma for the long time of the burning. The superconducting characteristic constitute an apparent complication either from the manufacturing and from the operational point of view. During manufacturing, indeed, various precautions must be guaranteed to avoid any possible damaging or contamination of the superconducting cable, and several complex controls must be foreseen to assess the correct production at every stage [6], [7].
Specifically, each component of each TF coil requires a dedicated manufacturing tooling and a related qualification program. At this aim a pipelining procedure has been followed either for the engineering activities carried out in support of the design and manufacture, either for the tooling procurement and manufacturing process. On the engineering side, the activities carried out during PAR 2012 have been devoted to the issue of quality control plans for the manufacturing processes, of the manufacturing drawings of the He circuit and welding map, and of technical specification for the procurement of the several tooling needed in the different manufacturing phases.
Concerning tooling procurement, in the course of 2013 the winding line designed for the manufacturing of each of the 54 double pancakes (DPs), that constitute the core of the magnets, have been set up and the relevant commissioning has been completed. Parallel, the other tooling that are to be used, like the impregnation mould for the winding pack (WP) constituted by the stacking of 6 DPs, or the vacuum chamber for the pressure and leak test of the WP and completed coil, have been installed and are ready for commissioning with the first WP to be produced.
At the completion of each WP, after stacking 6 DPs, taping with glass fiber for electrical insulation and impregnation in vacuum pressure impregnated (VPI) conditions, the core of the magnet has to be inserted into a steel structure that has to be welded, internally impregnated with epoxy resin to fill the gap between the steel and the WP, machined to its final dimension, and equipped with piping and instrumentation. The design of the tooling needed for the insertion of the WP into casing, initiated in 2012 has now been completed with the manufacturing of the relevant tooling that is to be installed in the last quarter of 2013 in ASG premises. Also the specification for the final machining of the casing structure to assure the interface matching has been completed. Conversely all the piping and instrumentation, that will be mounted on the coil at the very last stage of fabrication and whose design has been completed in 2012, have been produced and are currently hosted in the ASG workshop. In the following section the main tooling and activities carried out in the course of 2013 are reported.
In the rationale of the pipelining approach, some qualification activities that have started in 2012 have been completed in 2013, the latest results of these tasks are also presented in the following.

2 Description of activities and results

2.1 Engineering activities

From October 2012 to September 2013, the engineering activities have been directed to the completion of the following items:

- Quality control plan (QCP) for the in-series production of the main components already qualified;
- Manufacturing drawings of components to be assembled after WP manufacture
- Technical report for qualification activities
- Technical specification for the tooling procurement

Regarding QCP, it is worth noting that, due to the complexity of the project, a strong system of quality assurance has been developed [7]. At this aim after the experience gained in the qualification activities, the

QCP for the production has been developed. Specifically in the past year the QCPs for the electrical inner joints, terminations, electrical breaker, DP and WP manufacturing have been produced. Also on the qualification side, the QCP for the transverse welding on the casing mock-up has been finalized.
Concerning drawing activities, of the 167 drawings produced so far from the beginning of the contract with ASG, 75 has been issued from October 2012 till September 2013 in a revised version or for the first time. Need for revision has come from the experience of the qualification program or from slight modification in the overall design of the coil originated by interface problems with the rest of the components that will be assembled in the tokamak. In this regard, special attention has been devoted to the design of the He circuit that will be installed on the coil at the very last stage of manufacture and that serves to feed He inside the superconducting cables for their cooling in operation. Special mention deserves the manufacturing drawing of the coil casing weld map. This drawing summarizes all the experience gained in the qualification phase. Its completion was possible thanks to the collaboration of the ENEA, ASG, F4E and casing manufacturer Walter Tosto. Indeed the issue of the drawing has been preceded by several meeting in which all the options have been discussed and an optimization between different requirements has been found. Main assembly drawings are contained in attachment.
Concerning test reports, note that some activities has been carried out directly in ASG workshop, whereas other have been performed in ENEA labs. Additional information on these tasks is reported in the following sections.
As well as test reports give information on the correctness of the operations performed and therefore must be considered as exchange documents within the project, similarly technical specification have to be established in agreement among the different actors. The issue of technical specification therefore implies a continue revision process in order to match the final requirements of the machine with the budget and technical limit of the manufacturer. In the past year an important goal reached has been the definition of the technical specification for the final machining of the coil casing and those associated to the tooling procured.

2.2 Winding line commissioning

The winding line is a dedicated facility, specifically designed by ASG superconductors in Genoa, for the JT-60SA project. It consists of several components synchronized and remotely controlled. The line will be used to produce the 54 double pancakes (DPs) needed to manufacture 9 winding pack of 9 TF coils of JT-60SA (*i.e.* 6 DPs per coil). Each DP is obtained by winding a 240 m cable in conduit conductor spooled in a helical shape. The conductor is made of an internal NbTi and copper cable inserted in a steel jacket 2 mm thick. Each DP is wound onto a D-shape by means of the winding line designed by ASG in order to meet the though accuracy requirements foreseen in the project and needed to assure the proper magnetic field distribution in the Vacuum vessel.
Specifically, the winding line envisages the use of a reserve: namely the conductor is subdivided in two sub-spools and the winding starts from the midpoint. This approach has been chosen because assures a greater accuracy of the first turn of each DP that is the most important from the point of view of the magnetic field distribution. In fact, the winding is obtained by laying down the conductor onto a D shaped teflon coated carriage having an accuracy of 0.1 mm.

Figure 1 Overview of the winding line for the JT-60SA project in ASG Supercondutcors in Genoa

The winding line, of which one has an overview in Figure 1, is composed of two rail mounted carriages that host the de-spooling and the moving/rotary winding table. The tooling for conductor handling are suspended on two portal structures. In the picture the main components of the winding line are shown. Even the tool for the temporary hosting of the reserve can be observed in the picture. Indeed, the operation of the lifting of the reserve from the moving/rotary winding table at the end of the first layer winding and its transfer onto the de-spooling carriage is represented. Note in fact that the commissioning of the winding line has been carried out first in a conductor-free condition and then the operations have been repeated during the dummy DP manufacturing.

In order to describe the properties and complexity of each component of the winding line, it is appropriate to recall the main phases of each DP manufacturing:

1. Inspection of the conductor:
    a. Visual inspection
    b. Pressure test
    c. Flow test
2. Reserve spool preparation
    a. In line cleaning
    b. Application of protective film onto reserve spool
3. Layer jump manufacturing
4. He inlet manufacturing:
    a. Machining of jacket
    b. Pre-bending tool installation

   c. TIG welding of nozzle
   d. Electrical insulation
5. 1st layer winding
   a. In-line cleaning
   b. Sand-blasting
   c. Electrical insulation with glass tape
   d. Dimensional check
   e. Interturn insulation electrical test
6. Movement of reserve on de-spooling carriage
7. 2nd layer winding
   a. Sand blasting
   b. Electrical insulation with glass tape
   c. Dimensional check
   d. Interturn insulation electrical test
8. Movement of DP on ground station for ground insulation wrapping.

Figure 2 shows the reserve spool placed within the D shaped moving/rotary carriage at the end of the first layer winding (made of 6 turns). One may note that the conductor in the reserve is neither sand-blasted or wrapped with glass tape, whilst the conductor wound in the first layer has already been sand-blasted and taped.

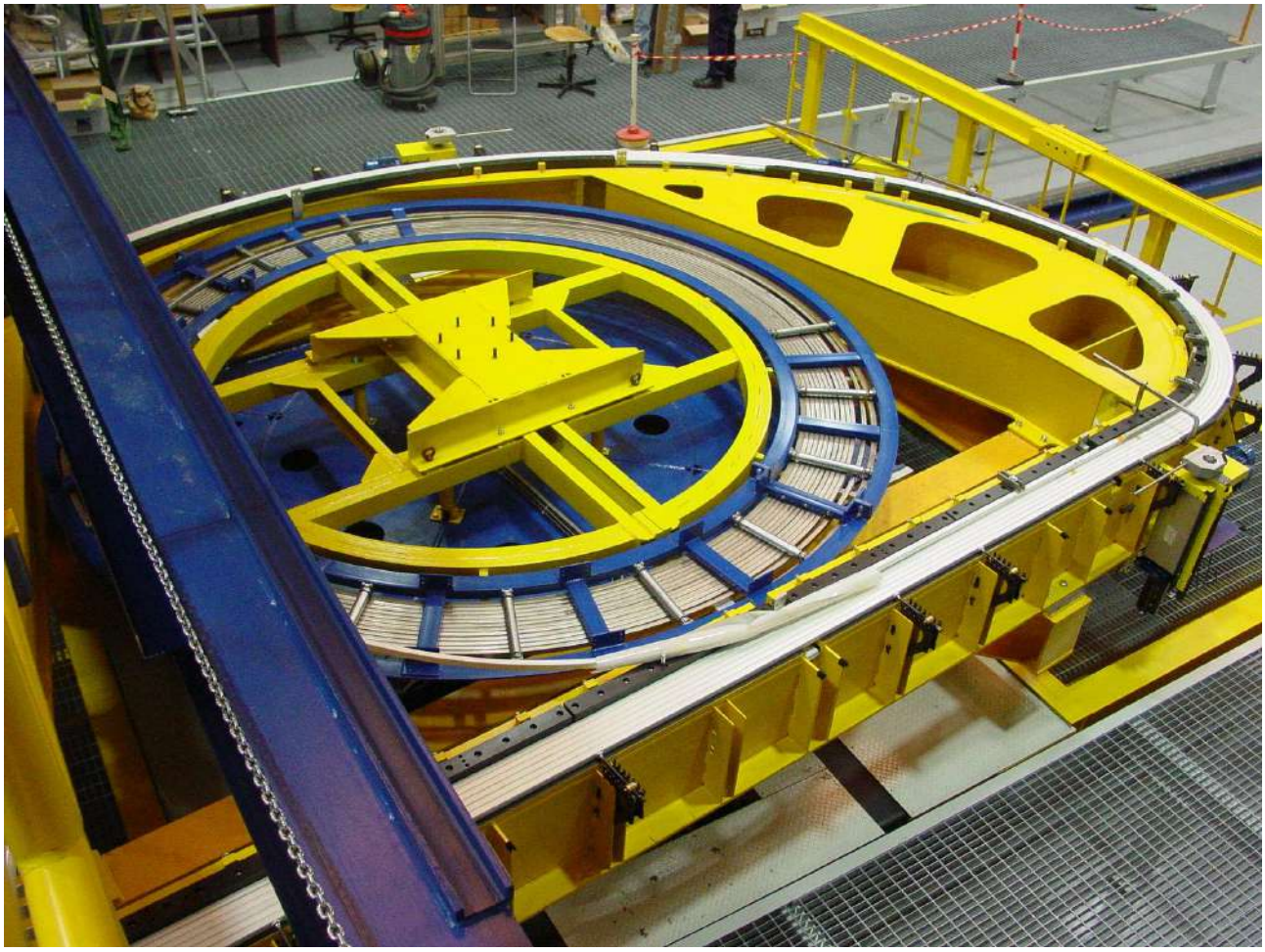

Figure 2 Reserve spool hosted within the moving rotary carriage at the end of the first layer winding

Figure 3 shows the de-spooling carriage during the reserve spool creation. One may note that the conductor originally spooled on a helical shape is straightened by the straightening unit consisting of three sets of rollers (the first to apply the large effect and the remaining two for the fine correction on both horizontal and vertical plane) and a driving unit. The conductor is then fed into the cleaning unit (shown in picture) and then into the bending one mounted on the second portal.

Figure 3 De-spooling, straightening and cleaning during reserve spool preparation

Figure 4 shows the three components mounted on the second portal, encountered by the conductor before laying down onto the D shape carriage: bending unit, sand blasting and taping machine. Note that all the components described so far are synchronized with respect to the roto-translating motion of the D-shape carriage. The control is guaranteed by a remote station in which the operator may assign the center line directly from CAD model with the information on length of the straight leg, and radii of curvature.

Figure 5 shows the tooling for layer jump, He inlet pre-bending and He inlet machining placed inside the D shape carriage at the end of the reserve spool creation and before the start of the first layer winding. The pre-bending is a tooling designed to elastically bend the conductor before the welding of the He inlet nozzle. The welding, in fact, will induce a bending deformation that is compensated by the pre-bending effect and that translates in an increased fatigue life of the component.
During DP manufacturing, after reserve spool formation and nozzle welding, the first layer is counter-clockwise wound using the half conductor remained on the de-spooling carriage as shown in the previous pictures.

Figure 4 Driving carriage, bending unit, sand-blasting and taping machines mounted on the second portal.

Figure 5 Layer jump and He inlet opening

Completed the first layer, the reserve spool is then positioned on top of the de-spooling carriage and the second layer of DP is wound in a clock-wise direction. The three phases of the reserve spool movement are shown in the following figures.

Figure 6 The reserve spool is picked up by the second portal and lifted from the roto-translating moving carriage.

Figure 7 The reserve spool is rotated while the roto-translating moving carriage is moved away.

Figure 8 The de-spooling carriage is then moved underneath the reserve spool and it is laid down on top of the carriage.

The DP manufacturing is completed. Before removing the DP from the D-shape carriage, some visual/dimensional check and interturn electrical tests are carried out. Then the DP is placed on the ground insulation station by means of the lifting tool, see Figure 9 and Figure 10, where a finer dimensional check is performed with a laser tracker (see Figure 11) and in case small adjustments are applied. Finally the ends are bent for the installation of the electrical exits (termination or inner joint) and the ground insulation consisting of 1 half overlapped glass tape (50 mm width and 0.25 mm thick) is wrapped.

Figure 9 Lifting of using DP and WP lifting tool

Figure 10 DP positioning on ground insulation bench

Figure 11 Dimensional survey on DP with laser tracker

2.3 Tooling design and commissioning

2.3.1 Pre-bending tooling for He inlet

During PAR 2012 some concerns on the fatigue life of the He inlet nozzle, welded onto the conductor jacket, led to the introduction of the so-called “pre-bending” unit in the DP manufacturing process. Indeed, some tests performed by CEA showed that a pre-bending on the conductor and the nozzle, before welding, allows a reduction of the deformation and the residual stress on the welding. This approach, in conjunction with the proper welding sequence, is a reliable strategy to reduce the residual stresses and as an alternative to the welding seam machining otherwise adopted. On these basis, ASG designed and manufactured the tooling shown in Figure 12.

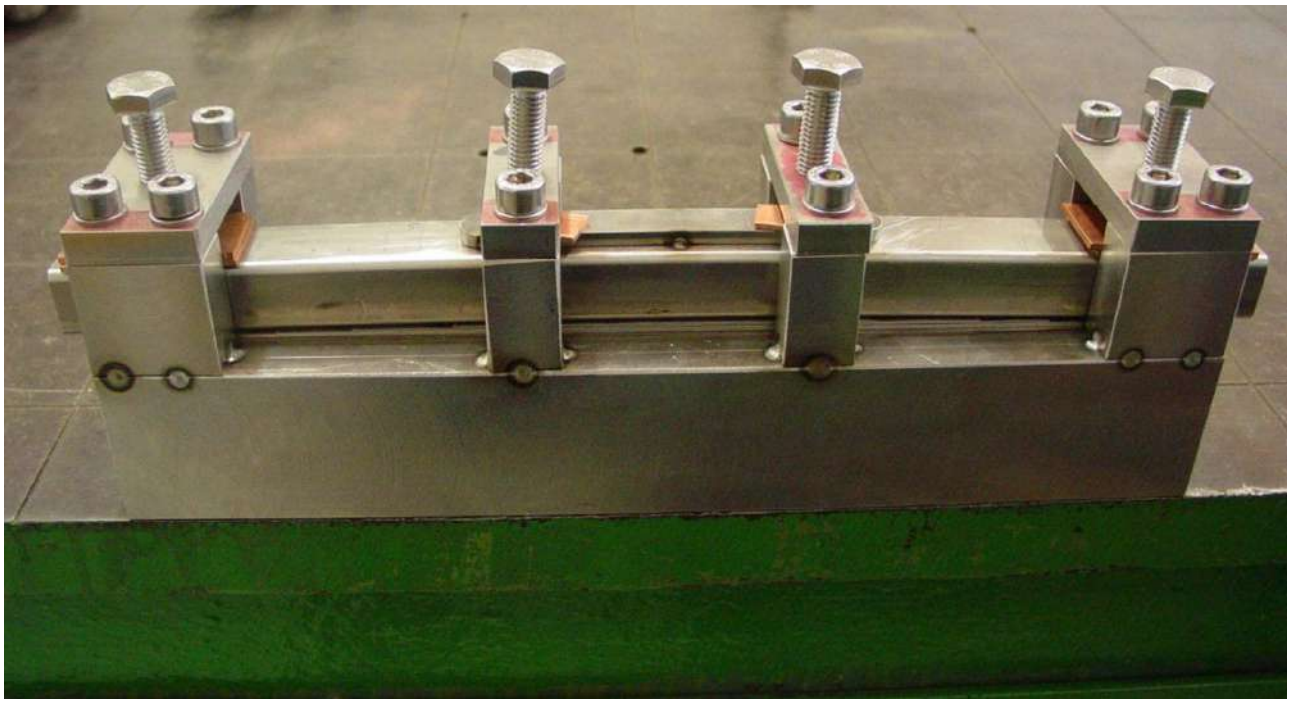

Figure 12 Tooling for He inlet pre-bending deformation before nozze welding.

The tool, that allows a pre-bending of ~0.4 mm over the ~120 mm length of the nozzle, has been realized in order to be easily installed on the conductor and adopted during the DP manufacturing (see Figure 5). The results of the tests performed on this tooling have been added to the He inlet validation program and are reported in [1].

2.3.2 Transportation frame

For the movement of the WP and coil inside ASG workshop, and subsequent shipment to cold test facility in France and final shipment in Japan, a frame suitable to rigidly support and protect the coil during transport has been designed. Figure 13 shows a pictorial overview of the transportation frame designed with its protective shield made of steel plates [11]. The complete coil is also visible inside. Figure 14 shows the present status of fabrication of the first transportation frame. The structure is completed, has passed the dimensional and load tests, has been painted (see Figure 15) and is ready for the delivery to ASG.

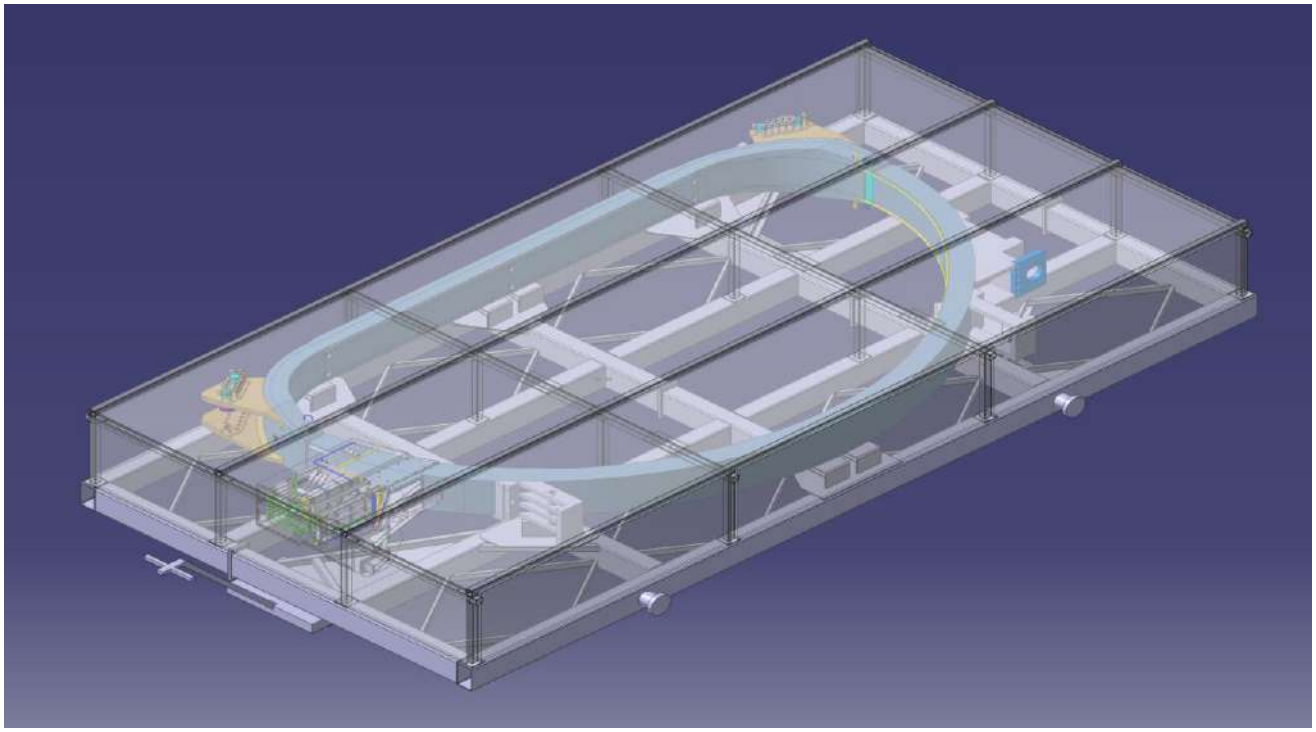

Figure 13 CAD model of the transportation frame designed in 2013 with coil inside.

Figure 14 Present status of fabrication of the first transportation frame.

Figure 15 Transportation frame painted and ready for shipment

2.3.3 Tooling for WP insertion into coil casing

After its manufacture, each WP will be inserted into the steel casing structure. The casing is composed of two outer shells and three inner covers. In order to manipulate the components and permit a suitable welding procedure, a dedicated tooling has been designed [10]. The equipment consists of a central structure equipped with brackets and anchorage devices that allow to hook up at the same time both the WP and the outer parts of the body ("straight leg" and "curved leg").This tooling is capable to rotate the entire assembly and in case to apply small deformation onto the steel casing components to assure the complete welding closure. Figure 16 shows the fabrication of the tooling for WP into casing integration. Figure 17 shows the load test carried out in the manufacturer workshop and Figure 18 shows the central core in ASG ready for final assembly.

Figure 16 Tooling for WP into casing insertion in vertical position.

Figure 17 Tooling for WP into casing insertion rotated horizontal position to simulate the latest operation before casing closure welding.

Figure 18 Central core of the WP into casing insertion tooling ready for assembly in ASG workshop.

2.3.4 Tooling for in-case impregnation and curing

After insertion into the casing structure, the coil must in-case impregnated with epoxy resin to fill the gap between WP and steel, needed not only for mechanical reasons but also from the electrical point of view. Winding pack in-case impregnation and curing includes:

- Installation of temporary closure plates for sealing of all holes in the casing structure.
- Vacuum pressure impregnation of the casing.
- Removal of the temporary closure plates.

Temporary closure plates must be fitted over any openings, including the internal casing cooling pipes, in the casing structure such that:

- They provide a suitable seal during the embedding process.
- They can be easily removed after embedding, without the possibility of damaging the embedding material in the process.

Since it will not be possible to visually inspect the final embedding after it has been completed, it is important that the process is well understood and well controlled. At this aim, during PAR 2012 a specific tooling, shown in Figure 19, has been designed [9]. It consists of an embedding station with adjustable supporting pillars to ease resin flow and prevent the formation of voids. A dedicated heating system is also placed around the coil (shown in Figure 19) to complete the curing cycle at the end of the process.

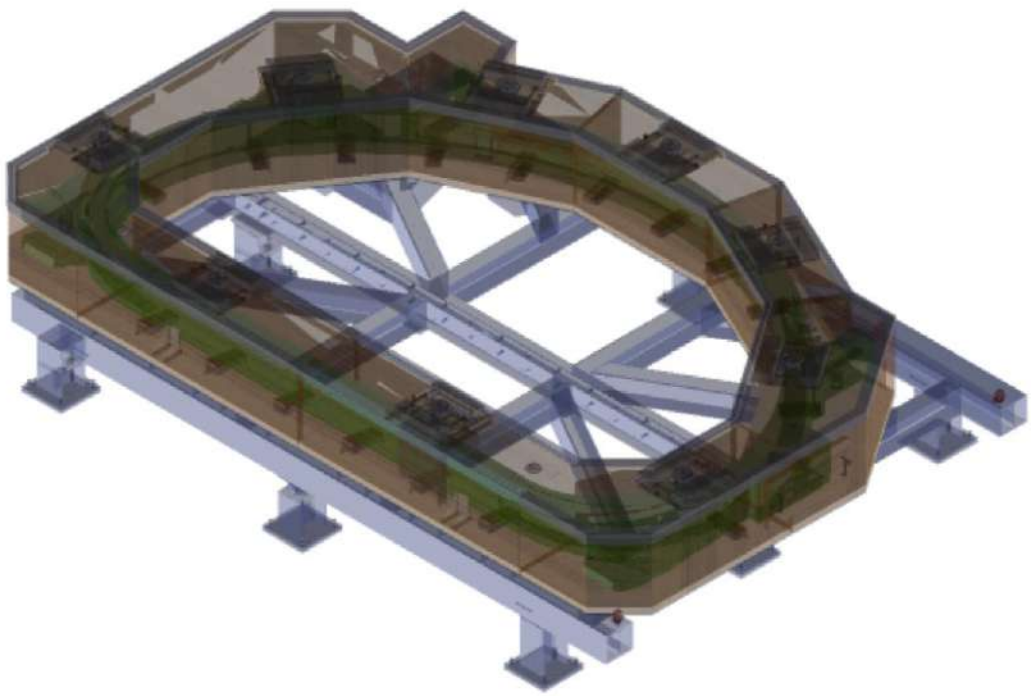

Figure 19 CAD model of the emebdding station designed for the in-case impregnation process

2.4 Qualification activities

In the pipelining approach mentioned in the introduction and followed in the present project, several qualification activities have been already carried out and concluded during the first year of activity. They were the tasks associated mainly with the DP manufacturing. The qualification program has not finished, however, and in the second year other important tasks have been successfully achieved. In the following sub-section the main qualification activities concluded in 2013 are illustrated.

2.4.1 Casing mock-up welding

In order to carry out several qualification activities a set of two steel casing mock-ups has been envisaged in the technical specification. The qualifications to carry out through the use of these mock-ups are:

i. WP insertion,
ii. casing welding,
iii. embedding,
iv. final machining,
v. instrumentation.

The first two activities listed above were conducted in 2013 using the impregnation beam as mock-up of the WP and the casing mock-up representative of casing cross section in the curved leg. Prior to deliver the casing mock-ups to coil manufacturer, a number of in-house tests have been also performed aimed at defining the proper chamfer geometry to carry out the welding process. Note, indeed, that in order to withstand the high cyclic mechanical loads expected in the magnet, all the welds are full penetration and full fuse type. Figure 20 shows the last step of the necessary qualification phase that permitted the definition of the chamfer for the transverse welding on 316L stainless steel plates 50 mm thick. In that case, as it is apparent also in Figure 20, several thermocouples were placed behind the welding root to measure the maximum temperature on the underlying plate that simulated a WP. The maximum temperature was kept at about 100°C to not damage the epoxy resin.

Figure 20 Transverse welding on 316L steel plates for chamfer confirmation and welding qualification

On the base of the results of the pre-qualification activity shown in Figure 20 and reported in [2], the casing mock-ups have been manufactured and delivered to ASG. Subsequently, the qualification activity on these mock-ups has started. Figure 21 shows the status of the activity after insertion of the WP mock-up inside the two halves of the casing mock-up. The chamfer for the transverse welding can be easily recognized together with the backing strip especially designed to protect the WP during welding. Also one may note the foils of glass introduced to cover the WP and needed in the subsequent embedding phase to fill the gap between WP and casing. Finally, the holes for the markers needed to check the position of the WP inside the casing are also visible.

Figure 21 Insertion of impregnation beam and combination of the two halves of casing curved leg mock-up

Figure 22 shows a successive step in the qualification activity described so far. To simulate the same conditions foreseen in the actual coil, the mock-up has been placed in a vertical position and it has been constrained to a structure that represent the rest of the coil stiffness.

In Figure 23 it shown how the mock-up appeared at the conclusion of the welding qualification. One may observe that not the transverse but also the longitudinal welding of the cover has been carried out. It is also apparent that the mock-up has been extensively monitored during the operation to check deformations and heating. Successively, the WP mock-up has been extracted away and the welds have been controlled via ultrasonic inspection either from the outside (like in the actual coil) and the inside, dye penetrants, and X-rays. Another casing mock-up remains available to carry out the remaining process to be qualified. This task will be performed in vicinity of the actual coil insertion and embedding for final training.

Figure 22 Transverse weld qualification on casing mock-up in the vertical position to simulate the operational conditions in the actual coil.

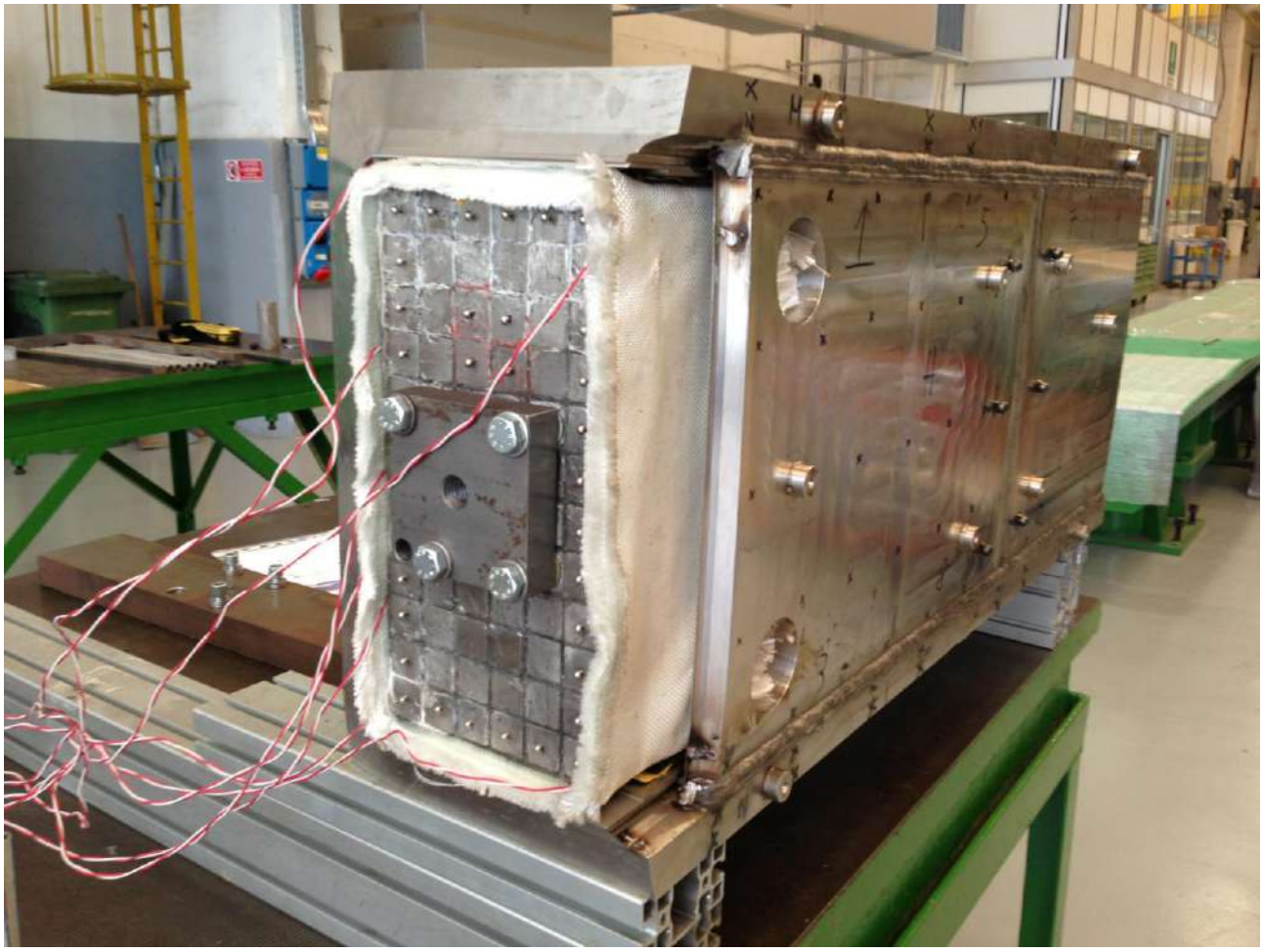

Figure 23 Appearance of casing welding mock-up after welding

2.4.2 Electrical breaker

To interrupt the electric connection between coil and ground, a set of 13 electrical breaker will be inserted in the He piping circuit. These devices are made of a filament wound epoxy resin shield that joins to pieces of steel pipe in which the supercritical He will flow in normal operation. The qualification of these devices, foreseen in the technical specification of the TF coil, planned the execution of 5 thermal shocks in liquid nitrogen followed by electrical tests, pressure tests and leak tests at ambient temperature to assess the robustness of the component. For the sake of completeness, additional cryogenic tests have been conducted on three samples manufactured by ASG in ENEA Superconductivity laboratory. The tests, reported in [4], consisted in immersing three times the breaker in a bath of liquid He while measuring leak tightness by means of mass spectrometer. The three breaker were chosen among different batch of production. In particular, one comes from the so called “qualification” series and was subjected to 5 thermal shocks, the two other belong to series production. One was subjected to 10 thermal cycles having a temperature variation speed below 30 K/h and a flat-top of 10 minutes. The last breaker was kept in its virgin state. In all the three cases, the leakage measured was below 10^{-8} mbar*l/s as requested in the specifications. Note also, that the devices have survived to thermal shocks from RT to liquid He due to the limitations of the experimental facility. Figure 24 shows the breaker welded to a pipe before insertion in the cryostat containing liquid He. Figure 25 shows the facility consisting of the cryostat and He mass spectrometer.

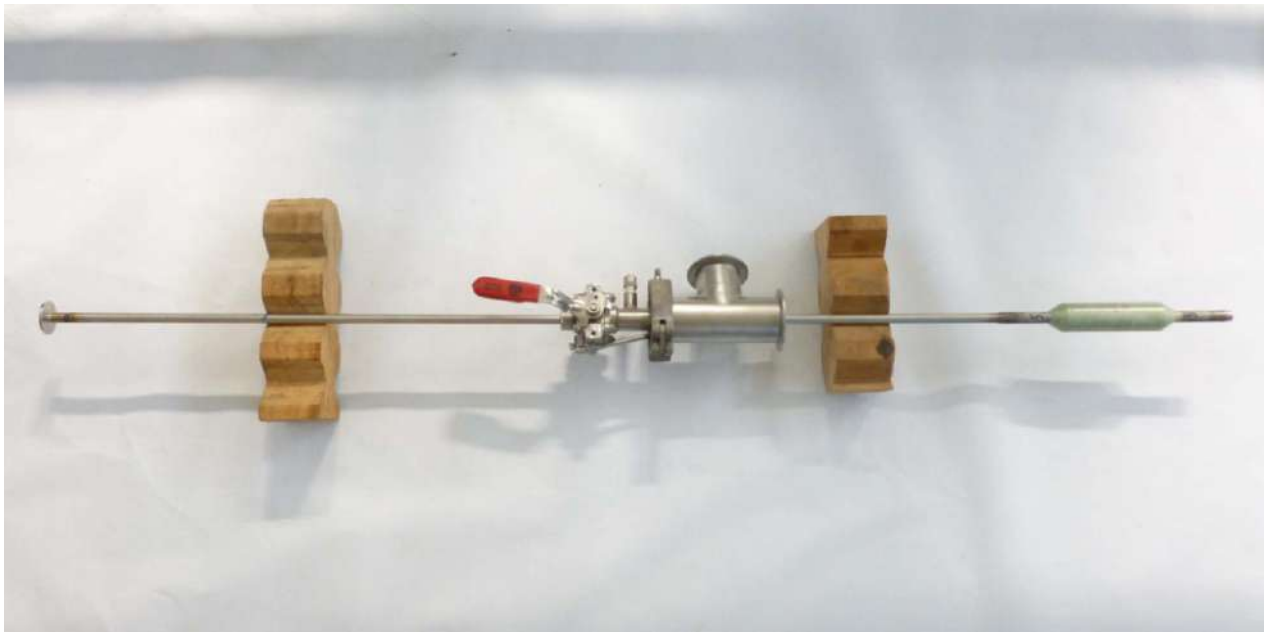

Figure 24 Breaker welded on pipe before insertion in cryostat containing liquid He.

Figure 25 Facility set-up for electrical breaker leak testing in cryogenic conditions.

2.4.3 Electrical inner joint and terminations

Like for the electrical breaker described in the previous section, also the electrical inner joint and terminations, manufactured by ASG in the frame of its qualification program, have been measured at ENEA Superconductivity laboratory for electrical tests in cryogenic conditions.

Figure 26 Electrical inner joint and termination mock-up before immersion in liquid He bath for electrical tests.

Figure 26 shows the joint mock-up connected to the current leads before immersion in the cryostat containing the bath of liquid He. One may recognize the sensors (voltage taps and thermocouples) applied on the sample and the copper shields needed to limit the heat exchange with the bath of liquid Helium. The electrical tests carried out on this mock-up have demonstrated the validity of the joint design and confirmed the process for its manufacturing [3]. Indeed, the electrical resistance of the inner joint was within the range 2±0.2 nOhm well below the maximum of 5 nOhm admitted in the technical specifications. Even the terminations showed an electrical resistance in the order of 2 nOhm again below the 5 nOhm requested. The measurements have been obtained at different currents. Indeed, plateau at 5, 10, 15 and 20 kA have been reached during the test to exclude the presence of current sensitivities that could be associated to manufacturing defects.

2.4.4 Electrical measurements of superconducting strands

During the qualification activity of the welding of the He inlet insert of JT-60SA TF magnet, performed by ASG during PAR 2011, some strands, or part of them, have been subjected to a localized heating that could have damaged or degraded their performances. In order to quantify the extent of this possible degradation and eventually prescribe additional requirements to the welding process, during PAR 2012 an extensive measurements campaign has been conducted in ENEA laboratories. The likelihood of strand performance degradation should be indeed avoided during coil production to prevent quench instabilities during tokamak operation. The measurement have consisted in extracting some strands from the He insert welded by ASG and comparing their current carrying capability with that of the virgin strands and with that of strands subjected to a heating permitted by the technical specification. The results showed on one side the absence of appreciable degradation in the strand subjected to the heating of the welding, on the other the necessity to keep more stringent requirements than those originally foreseen in the technical specification to avoid any performance degradation of the coil in case of quench.

3 Conclusions

During PAR 2012 the production of the DPs for the JT-60SA TF coils has started in ASG Superconductors in Genoa under ENEA supervision. The production phase has been anticipated by an intense design and drawing activity. In parallel, several tooling and qualifications, needed to validate the manufacturing processes, have been accomplished. In the spirit of the pipeline approach, other process and tooling still remain to be manufactured and validated: these will be completed in the following years together with the completion of the coils as originally planned.

4 References

1. F. Terzi, “He inlet welding qualification procedure: test results”, RT-JT60SA-ASG14020.
2. F. Terzi, “Test saldatura piastre per casse bobine JT-60SA”, RT-JT60SA-ASG14134 rev. 1.
3. C.S. Fiamozzi Zignani, “Report of ASG JT-60SA electrical tests carried out in ENEA Superconductivity lab”, RT-JT60TF-02.
4. R. Freda, L. Affinito, “Report of leak rate tests of ASG JT-60SA electrical breaker in ENEA Superconductivity lab”, RT-JT60TF-03
5. G. De Marzi, et al., “JT-60SA NbTi Strand Characterization after thermal shock due to He Inlet Welding”, MT 23, July 14-19 2013, Boston, MA, USA.
6. A. Cucchiaro, “Manufacturing of the First Toroidal Field Coil for the JT-60SA Magnet System”, SOFE 25, June 11-14 2013, San Francisco, CA, USA.
7. V. Cocilovo, “Qualification Process and Quality Control Planning for JT-60SA Toroidal Field Coils Construction”, SOFE 25, June 11-14 2013, San Francisco, CA, USA.

8. A. Cucchiaro, et al., “Qualification and preparatory activities for the manufacturing of 9 TF coils of the JT-60SA magnet”, (2013) Fusion Engineering and Design, . Article in Press.
9. G. Drago, “Attrezzatura per l’impregnazione di embedding delle bobine toroidali JT60SA”,700RM14379-Rev0.
10. S. Cuneo, “Specifica tecnica attrezzatura incassamento WP”, 14307Rev.2.
11. S. Trasino, “Specifica tecnica telaio movimentazione e trasporto bobine”, 14357Rev.0.
12. G. M. Polli, G. De Marzi, C.S. Fiamozzi-Zignani, “Report of Jc measurements on heated strands at He inlet welding area”, RT--JT60TF-01.

5 List of Attachments

- Test reports:
  - F. Terzi, “He inlet welding qualification procedure: test results”, RT-JT60SA-ASG14020.
  - F. Terzi, “Test saldatura piastre per casse bobine JT-60SA”, RT-JT60SA-ASG14134 rev. 1.
  - C.S. Fiamozzi Zignani, “Report of ASG JT-60SA electrical tests carried out in ENEA Superconductivity lab”, RT-JT60TF-02.
  - R. Freda, L. Affinito, “Report of leak rate tests of ASG JT-60SA electrical breaker in ENEA Superconductivity lab”, RT-JT60TF-03.
  - A. Capurro, “Report of the JT-60SA casing mock-up welding”, RT-JT60TF-ASG-15049.
  - G. M. Polli, G. De Marzi, C.S. Fiamozzi-Zignani, “Report of Jc measurements on heated strands at He inlet welding area”, RT--JT60TF-01.

- QCPs:
  - QCP‑JT60TF‑ASG‑90.12110.03: Qual. e Valid.Proc.‑Saldatura mock‑up cassa bobina/Qual. & Valid.Proc.– Coil case mock‑up welding
  - QCP-JT60TF-ASG-90.13754-S_Rev_0_TERMINATION_series:
  - QCP-JT60TF-ASG-90.13729-S_Rev_0_INTERNAL_JOINT_series:
  - QCP-JT60TF-ASG-90.13952-S_Rev_0_INSULATION_BREAKER_series:
- Manufacturing drawings:
  - DD‑JT60TF‑ASG‑13915: Layout saldature cassa bobina / Coil casing welding plan
  - DD‑JT60TF‑ASG‑13945_Fg.1: Asm bobina+piping/Coil+piping ass.ly
  - DD‑JT60TF‑ASG‑13945_Fg.2: Asm bobina+piping (saldature)/Coil+piping ass.ly (welds)
  - DD‑JT60TF‑ASG‑14216: Asm. Bobina + piping + strumenti / Coil + piping + instruments ass.ly
  - DD‑JT60TF‑ASG‑14295: Asm support terminazioni / Terminations support ass.ly
  - DD‑JT60TF‑ASG‑14501: Maglia rilievi dimensionali DP / DP dimensional survey web
  - DD‑JT60TF‑ASG‑14351: Maglia rilievi dimensionali WP / WP dimensional survey web
  - 010202-503200_06_MACHINING DETAIL INNER-OUTER LEG_Sheet_1.pdf
  - 010202-503200_06_MACHINING DETAIL INNER-OUTER LEG_Sheet_2.pdf
  - 010202-503200_03_MACHINING DETAIL INNER-OUTER LEG_Sheet_3.pdf
  - 010202-503200_06_MACHINING DETAIL INNER-OUTER LEG_Sheet_4.pdf
  - 010202-503200_06_MACHINING DETAIL INNER-OUTER LEG_Sheet_5.pdf
  - 010202-503200_04_MACHINING DETAIL INNER-OUTER LEG_Sheet_6.pdf
  - 010202-503200_05_MACHINING DETAIL INNER-OUTER LEG_Sheet_7.pdf
  - 010202-503200_06_MACHINING DETAIL INNER-OUTER LEG_Sheet_8.pdf
  - 010202-503200_03_MACHINING DETAIL INNER-OUTER LEG_Sheet_9.pdf
  - 010202-503200_01_MACHINING DETAIL INNER-OUTER LEG_Sheet_10.pdf
  - 010202-503200_00_MACHINING DETAIL INNER-OUTER LEG_Sheet_11.pdf

6 Abbreviations and Acronyms

DP = Double Pancake
WP = Winding Pack
TF = Toroidal Field
PF = Poloidal Field
QCP = Quality Control Plane

ASG Superconductors

Titolo / title	Identificativo / document no.	Rev. / rev.	Pag. / page	Di / of
Qualifica procedura saldatura He inlet: risultati delle prove ***He-inlet welding qualification procedure: test results***	**700RM14020**	0	1	17

Identificativo Contratto ENEA / *ENEA Contractual ID no.*: **RT-JT60TF-ASG-14020**

Tipo doc. / *doc. type*	Emittente / *issued by*	Edizione in lingua / *language*	Derivato da / *derived from*	Rev. / *rev.*
RT	GQL	ITA/ENG	/	/

Commessa / *job no.*	Progetto / *project*	Cliente / *client*
RS24	JT-60SA	ENEA C.R. Frascati

Rev. / *rev.*	Motivo Revisione / Reason for revision
0	Emissione documento / *First issue*

Rev / *rev.*	St. / *st.*	Sc. / *sc.*	Preparato / *prepared*	Controllato / *checked*	Verificato / *checked*	Verificato / *checked*	Verificato / *checked*	Approvato / *approved*	Data / *date*
0			F. Terzi	S. Cuneo	P. Pesenti			G. Drago	02/04/2013

ASG Superconductors s.p.a. si riserva tutti i diritti su questo documento che non può essere riprodotto neppure parzialmente senza la sua autorizzazione scritta
ASG Superconductors s.p.a. reserves all rights on this document that can not be reproduced in any part without its written consent

SOMMARIO / *SUMMARY*

1. INTRODUZIONE / *INTRODUCTION* 3
Acronimi / *Acronyms* 3
2. DESCRIZIONE / *DESCRIPTION* 3
2.1 Dettaglio delle attività / *Activity details* 8
3. PRE-CURVATURA CONDUTTORE / *CONDUCTOR PRE-BENDING* 15
4. RISULTATI DEI TEST E CONCLUSIONI / *TEST RESULTS AND CONCLUSIONS* 16
5. RIFERIMENTI / *REFERENCES* 17

1. INTRODUZIONE / *INTRODUCTION*

Ciascuno dei 6 conduttori, di tipo "cavo in condotto", che costituiscono una bobina di JT60SA TFC ha un ingresso He saldato direttamente sul condotto a circa matà della sua lunghezza. L'elio entra all'interno del conduttore e fuoriesce dalle due estremità attraverso le giunzione elettriche.
Nel presente documento vengono presentati i risultati delle prove di saldatura dell'inserto per ingresso He (He-inlet) per la qualifica del processo.
I campioni sono stati realizzati secondo i documenti elencati qui di seguito.

Each of the six lengths of cable-in-conduit superconductor in a TF coil has a He inlet fitting welded onto the jacket half way along its length.
The He enters the conductor at this mid point and leaves at the two ends through the superconducting joints
This document describes the test results of the welding qualification process about He inlet of JT60SA double pancakes.
These samples have been manufactured according to the following documents

- SPT-JT60SA-01 rev.0 JT60SA – Technical specification for manufacture of 9 Toroidal Field Coils
- ASG doc. n.700RM13849 rev.1 (s.t ASG / *ASG tech. spec.*)
- SPT-JT60SA-01 rev.0 (spec.tecn. ENEA / *ENEA tech. spec*)
- QCPJT60TF-ASG-90.13646 rev.3 (Piano di Controllo ASG / *ASG Control Plan*)

Acronimi / *Acronyms*

TFC = Bobina di campo toroidale / *Toroidal Field Coil*
TC = termocoppia / *thermocouple*
IIS = Istituto Italiano della Saldatura

2. DESCRIZIONE / *DESCRIPTION*

L'attività di qualifica del processo svolta in due fasi.

Prima Fase - Definizione dei Parametri di Processo
Questa prima fase ha avuto come scopo principale da definizione dei parametri di saldatura, mentre durante la seconda fase è stato realizzato il campione ufficiale di qualifica del processo.

In particolare durante la prima fase sono state eseguite prove di lavorazione meccanica del jacket per realizzare l'apertura sul jacket e sono stati messi a punto i parametri di saldatura (corrente, frequenza, tempi di saldatura, tempi di attesa per il raffreddamento, etc).

Per tale attività sono stati impiegati sia spezzoni di tubo 25x25 mm, sp. 2 mm in AISI 316L all'interno del quale è stato inserito un lamierino sp. 0.02 mm e una treccia di rame per simulare il conduttore, sia campioni di cavo conduttore.
Tra la treccia di rame e il lamierino sono state inserite n. 4 termocoppie (TC-1 ÷ TC-4) per il controllo della temperatura interna durante la saldatura.

All'esterno è stata inserita una termocoppia (TC-5) che registra la temperatura del jacket: tale termocoppia simula quella che verrà realmente installata sul cavo del doppio pancake (DP) al momento della saldatura dell'ingresso He.
Altre prove sono state invece eseguite utilizzando spezzoni di conduttore 22x26 mm, sp. 2 mm e adottando lo stesso schema di posizionamento delle termocoppie.

The qualification process activities have been divided in two phases.

First Phase – Welding Parameters Definition

The aim of this first phase was about the definition of welding parameters, while the second one was about the manufacturing of the qualification sample.
In particular, during the first phase some test have been performed to machine the window on the jacket, while the aim of second one was the definition of the welding parameters (current, frequency, welding time, waiting time between welds, etc.).

About these activities both AISI 316L tubes 25x25 mm, th. 2 mm, with inside a copper cable and a s.s shims (th.0.02 mm) in order to simulate the real conductor configuration, both conductor samples have been used.
N.4 thermocouples (TC-1 ÷ TC-4) has been fixed between the s.s. shim and the copper cable to monitor the temperature of the cable during welding.

Another thermocouple (TC-5) has been fixed onto the external wall of the jacket: this thermocouple simulate the one that will be put on the real conductor of the DP during the welding of the He inlet.
Same test have been performed by using some samples of the real conductor 22x26 mm, 2 mm thickness, with the same system of thermocouples for the monitoring of temperature.

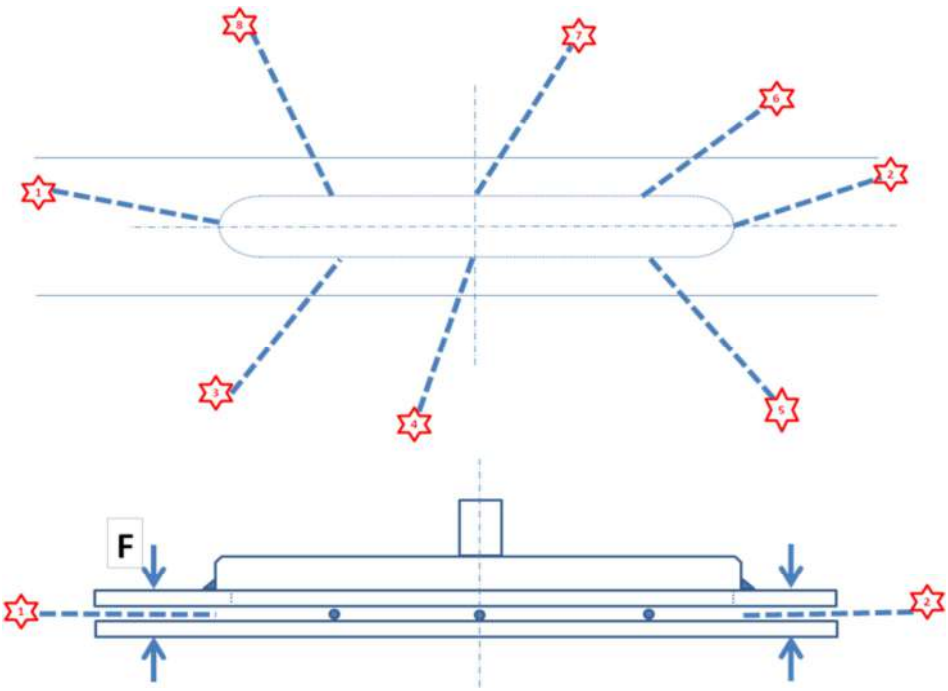

Fig.1 - Identificazione saldature iniziali / *First welds identification*

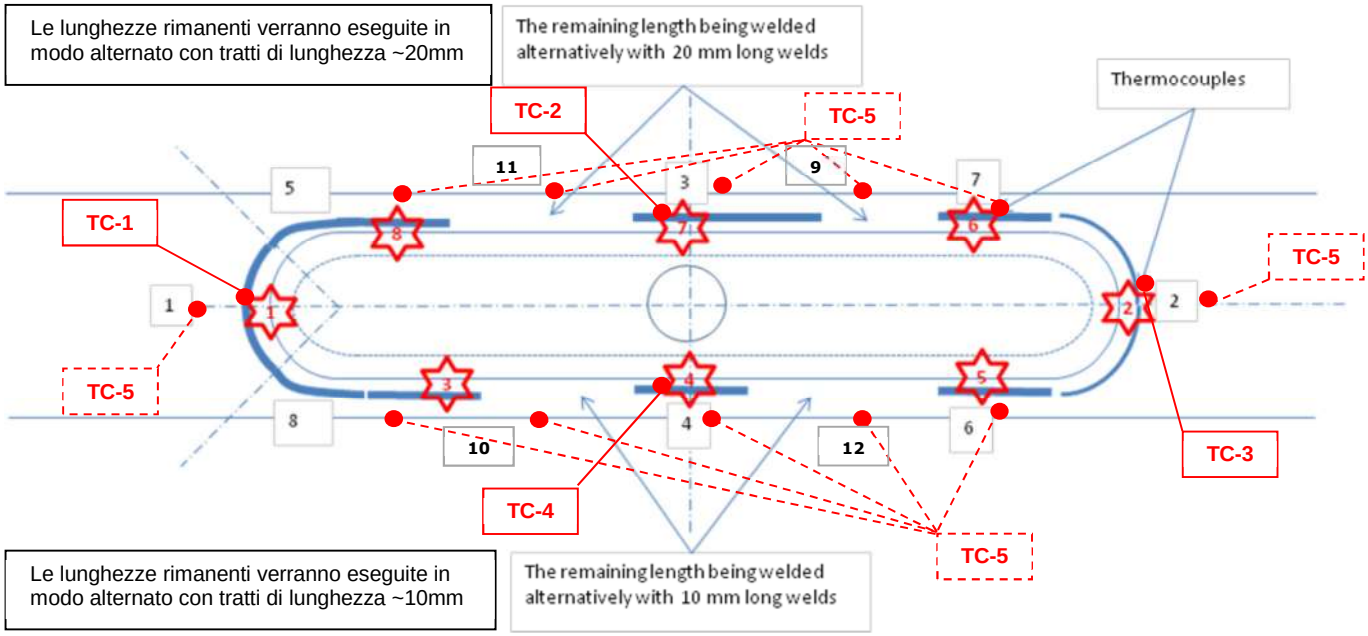

Fig.2 - Identificazione saldature di completamento (1 ÷ 12) e posizione termocoppie (TC-1 ÷ TC-4 +TC-5 esterna, posizionata sul jacket a seconda del tratto dalla saldatura)
Welds identification (1 ÷ 12) and positioning of thermocouples (TC-1 ÷ TC-4 +TC-5 external TC, moved on the jacket on different positions)

Fig.3 - Componenti per test preliminare: inserto ingresso He, tubo 25x25mm, riempitivo in nylon, lamierino sp=0.02mm, treccia in Cu con termocoppie

Components for preliminary test: He inlet, 25x25mm tube, filler, s.s. shim th=0.02mm, Cu cable with thermocouples

Seconda Fase – Realizzazione campioni di qualifica e test

La seconda fase è quella che ha portato alla qualifica vera e propria del processo.

Per l'esecuzione delle prove di qualifica è stato necessario realizzare due campioni distinti:

1) un campione realizzato con cavo "dummy" (id. **TFQL-3**) per qualificare la saldatura in termini di tenuta a vuoto e in pressione, per analisi micro e macrografica
2) un campione realizzato con cavo s.c. (id. **TFSL-3**) per qualifica della saldatura in termini di caratteristiche del superconduttore (assenza di degrado del NbTi)

La saldatura è stata realizzata utilizzando i parametri di saldatura messi a punto durante la prima fase. Inoltre la saldatura è stata sottoposta ad una lavorazione meccanica mediante fresatura del cordona di saldatura allo scopo di distendere il materiale e ottenere un miglioramento della resistenza a fatica.

Entrambi i campioni sono stati sottoposti di analisi mediante test sia distruttivi che non distruttivi in accordo a quanto specificato nel Piano Controllo QCPJT60TF-ASG-90.13646 rev.3

Qui di seguito sono riassunte la attività di test:

a) controllo visivo e mediante liquidi penetranti prima e dopo cicli termici in azoto liquido (n.3 cicli termici 300K - 77K - 300K con permanenza in temperatura di 10 min.)
b) controllo visivo, controllo mediante liquidi penetranti e radiografico (da parte IIS) dopo lavorazione meccanica del cordone di saldatura per migliorare la resistenza a fatica
c) test in pressione e di tenuta a vuoto con He a P=25 bar / 1 h
d) analisi micrografica e macrografica di n.3 campioni di sezione della saldatura (da parte IIS)
e) test di corrente critica su strands estratti dalla zona termicamente alterata (da parte ENEA)

Tutte le prove di qualifica sono state eseguite in presenza di personale ENEA e di un Ente Terzo, Istituto Italiano di Saldatura (IIS).

Second Phase – Manufacturing of qualification samples and test

The second phase was about the real qualification of the process.
In order to perform all the qualification tests, two different samples have been manufactured:
*1) a sample, made by a dummy cable (id. **TFQL-3**), has been dedicated to the qualification of the welding process in terms of pressure and He leak tightness*
*2) a sample, made by a s.c. cable (id. **TFSL-3**), has been dedicated to the qualification of the welding process in terms of characteristics of the superconductor (no degradation of NbTi)*

Weld has been made by using the parameters fixed by the preliminary activities during the first phase.
Besides the weld has been machined by grinding in order to reduce tension inside the material so to increase the fatigue resistance of the material.

The quality of both samples have been checked by means of destructive and non-destructive tests according to Quality Control Plan QCPJT60TF-ASG-90.13646 rev.3.
Here after the testing activities are listed:

a) visual check, dye penetrant test before and after thermal cycles in liquid nitrogen (n.3 thermal cycles 300K - 77K – 300K with temperature steady state 10 min.)
b) visual check, dye penetrant test and radiographic test (by IIS) after milling of weld to improve fatigue resistance of the material
c) pressure and He leak test at P=25bar / 1h
d) micrographic and macrographic analysis of n.3 samples of sections of TIG welds (by IIS)
e) critical current test of strands extracted from temperature affected zone (TAZ) (by ENEA)

Qualification test has been performed under the witness of ENEA personnel and Third Party Authority personnel (Istituto Italiano della Saldatura - IIS)

2.1 Dettaglio delle attività / *Activity details*

Lavorazione meccanica del jacket

La lavorazione meccanica del jacket è stata eseguita con una particolare fresa di diametro 10.0mm. realizzata appositamente per questo lavoro.

Dopo aver opportunamente posizionato il conduttore sull'attrezzatura, si inizia la fresatura del jacket asportando 1.9 mm in 6 passate successive, quindi con asportazione di circa 0.03 mm per passata.

Si procede quindi alla rimozione manuale della lamina in acciaio (sp. 0.02 mm) di protezione degli strands. (Fig.3)

E' importante segnalare la criticità di tale operazione a causa dell'irregolarità della treccia degli strands che a volte non sono perfettamente allineati tra loro, bensì sovrapposti. (v. Fig.4) relativa ad una prova di rimozione del jacket su una lunghezza di 310 mm).

Machining of the jacket

The machining of the jacket has been performed by using a dedicated milling machine 10.0mm diameter.

After the positioning of the cable onto the milling machine, operation starts by removing 1.9mm of material from the jacket in 6 steps of ≈0.03mm of removal.

Then a manual removal of the s.s. protection sheet (th. = 0.02mm) has been performed. (Fig.3)

It is important to underline that this operation is very critical because of a no good alignment of the strands that sometimes are slightly overlapped one each other (see Fig.4 regarding a test of removal of 310mm of length of jacket).

Fig.4 - Lavorazione meccanica del jacket / *Machining of the jacket*

Fig.5 - Rimozione del jacket per analisi visiva dello stato del conduttore
Removal of the jacket to perform a visual check of the conductor

Saldatura dell'ingresso He

La procedura inizia con la puntatura dell'inserto (Fig.1), quindi viene eseguita la saldatura a tratti seguendo la sequenza indicata in Fig.2.

Durante questa fase di ricerca dei parametri ottimali sono state eseguite prove a differenti valori di corrente sia con alimentazione in corrente continua (DC) che in pulsato.

I dettagli dell'esecuzione delle prove di saldatura (pre-qualifica) sono riassunte in Tabella 1

Al termine della campagna di test preliminari sono stati definiti i seguenti parametri di saldatura da applicare per l'esecuzione della prova di qualifica del processo:

- metodo: TIG DC con apporto di materiale, elettrodo tungsteno (W) diam. 2.4 mm
- corrente: I(A)= 55 A (DC)
- lunghezza del singolo tratto: da 20 a 25 mm
- velocità: da 29 a 38 mm/min (dipendente del tratto interessato)

Le temperature registrate durante la saldatura variano da 130 ℃ (sul cavo conduttore) a 360 ℃ (sul jacket in prossimità della termocoppia). Solo in un caso la temperatura di una termocoppia ha raggiunto 500 ℃ per un tempo di circa 3 sec. situazione acce ttabile in quanto la specifica tecnica richiede che non si superi la temperatura di 500 ℃ per 30 sec. La r egistrazione delle temperature durante la prova di qualifica e riportata nella seguente fig. 5.1.

He inlet welding

The procedure starts with the spot welding of the He inlet (Fig.1), then welding process continues with the sequence of operation as showed in Fig.2.

During this preliminary phase of research of the correct welding parameters, different test have been performed both with direct current (DC) and with pulsed current.

Details of execution of pre-qualification welding tests are summarized in the following Table 1.

At the end of these preliminary tests, the following welding parameters have been fixed. They will be used for the qualification process :

- *method: TIG DC with filler material, tungsten (W) diam. 2.4 mm*
- *current: I(A)= 55 A (DC)*
- *length of a single weld: from 20 to 25 mm*
- *speed: from 29 to 38 mm/min (depending on the weld position)*

During welding, recorded temperatures are from 130°C (on the conductor) to 360℃ (on the jacket near the TC). Only in one case the temperature recorded by a TC reached 500℃ on 3 sec. about: this situation is fully acceptable and in agreement with the requirements of the technical specification (max T 500℃ / 30 sec.). The temperature profile during qu alification welding is reported in the following fig. 5.1.

#	Corrente *Current*	Modo / *Mode*	N° tratti di saldatura *Nr. of welds*	L tratto di saldatura *Weld length*	Note / *Remarks*
1	55 A DC	DC	6	35-40 mm	
2	110-120 A AC	pulsato / *pulsed at* f=10Hz	6	35-40 mm	
3	110 A AC	pulsato / *pulsed at* f=10Hz	6	35-40 mm	
4	110 A AC	pulsato / *pulsed at* f=10Hz	12	20-25 mm	flussaggio Ar nel conduttore / *Ar flow inside conductor* = 14 lt/min
5	55 A DC	DC	12	20-25 mm	flussaggio Ar nel conduttore / *Ar flow inside conductor* = 14 lt/min

Tabella 1 / *Table 1*

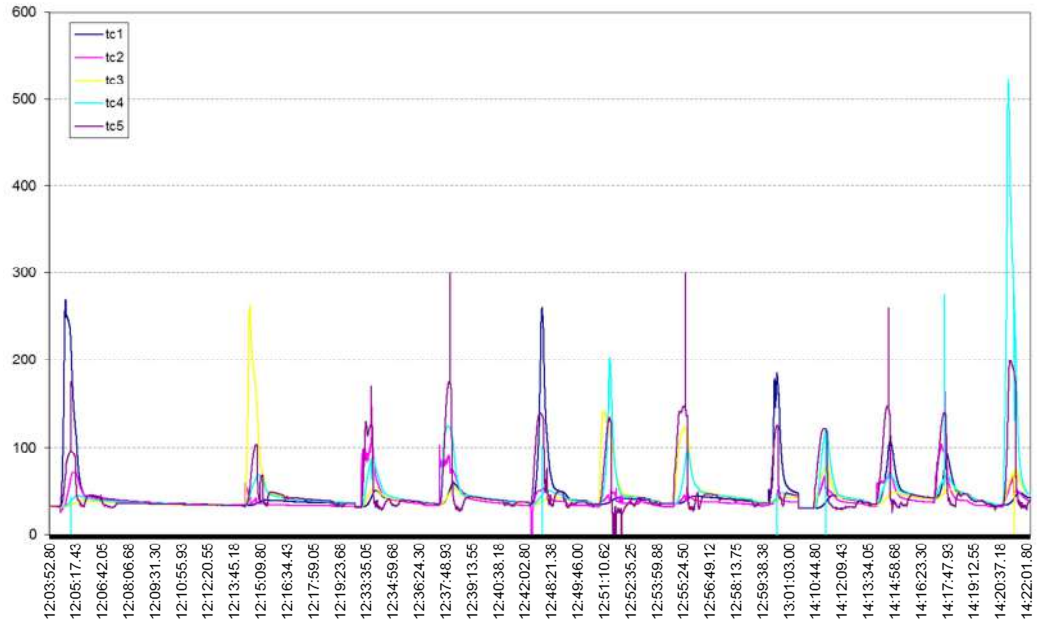

Fig.5.1 - Profilo di temperatura in saldatura / *Temperature profile during welding*

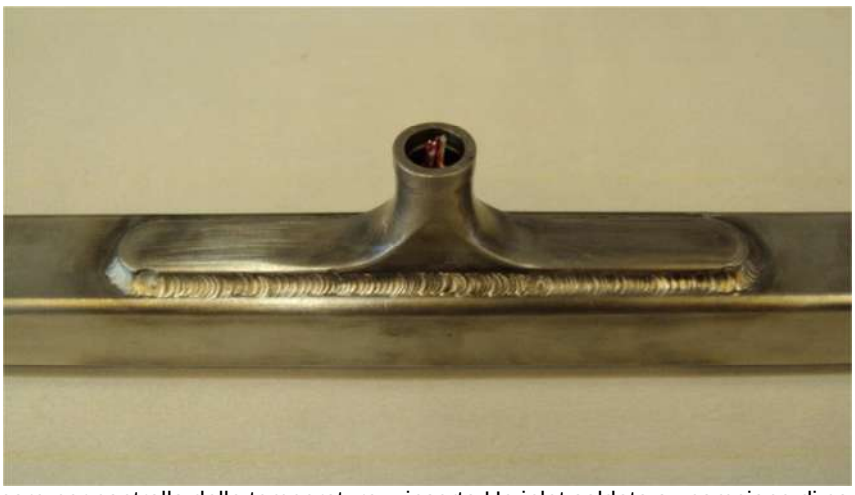

Fig.6 - Test preliminare per controllo delle temperature: inserto He inlet saldato su campione di conduttore 22x26 mm
All'interno sono state posizionate le termocoppie sec. lo schema di Fig.2
Preliminary test for temperature control: He inlet welded on a 22x26 mm conductor sample
Inside TCs have been positioned according to Fig.2 scheme

Fig.7.1 - 7.2 - 7.3 - Dettaglio lavorazione campione per prova di qualifica
Sample for qualification process: machining details

Fig.8 - Campione di qualifica / *Welding qualification sample*

Fig.9.1-9.2 - Test liquidi penetranti / *Dye penetrant test*

Lavorazione meccanica del cordone di saldatura

Scopo di tale lavorazione è eliminare possibili tensioni all'interno del materiale.

Durante il normale funzionamento del magnete, il conduttore viene infatti sottoposto a dilatazioni e contrazioni generate sia dall'energizzazione del magnete stesso che dai cicli di raffreddamento e riscaldamento.

La lavorazione meccanica è stata eseguita manualmente con una fresa di dimensioni adatte allo scopo.

Mechanical machining of weld

The aim of this job is to reduce possible tensile stress from inside of the welded material.

In fact, during normal operation cycle of the magnet, the conductor will be subject to expansion and contraction caused by energization and by thermal cycles.

The machining as been performed manually by using a small milling tool.

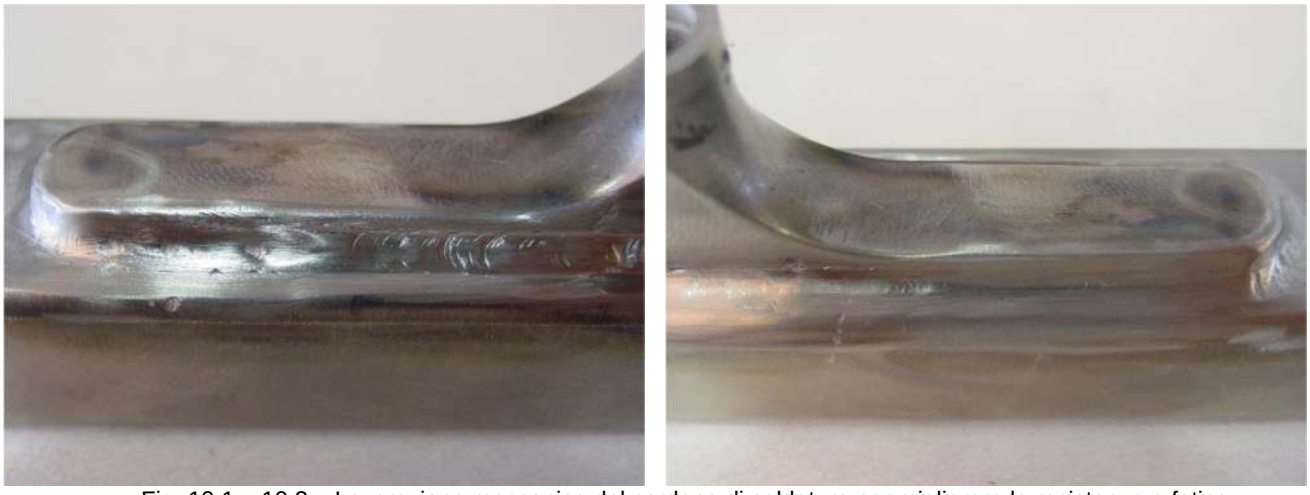

Fig. 10.1 – 10.2 – Lavorazione meccanica del cordone di saldatura per migliorare la resistenza a fatica

Milling of weld to improve fatigue resistance of the material

Prova in pressione e di tenuta a vuoto

Durante il funzionamento del magnete, all'interno del conduttore potrebbe generarsi un aumento della pressione dell'elio di raffreddamento.

Lo scopo di tale prova è stato di verificare la tenuta delle saldature in caso si verifichi una situazione di sovrappressione interna.

La prova è stata eseguita sul campione di saldatura realizzato con cavo *dummy* opportunamente collegato all'impianto di prova.

Il tasso di fuga calcolato è stato di 5.39E-11 mbar l /s (valore nom. richiesto LR<1.E-9 mbar l /s) con il campione in pressione a 25 bar.

Pressure and He leak test

During operation of the magnet, a possible increasing of the He pressure inside the conductor could happen.

Scope of this test is to check the vacuum tightness of welds in case of over pressure.

This test has been executed on the sample made by dummy conductor installed in the vacuum chamber.

Maximum calculated He leak rate was 5.39E-11 mbar l /s (nom. value LR<1.0E-9 mbar l/s) with the conductor sample under pressure at 25 bar

Fig. 11.1 – 11.2 - Test in pressione e di tenuta a vuoto / *Pressure and He leak test*

Prova di isolamento

Su un campione di He-inlet, dopo la saldatura del bocchello, è stata qualificata la procedura di isolamento elettrico mediante nastro di vetro successivamente impregnato con resina epossidica (vedere figura 12).

Sul campione, dopo impregnazione, sono stati eseguiti con successo i test elettrici a 3.8 KV e 5.0 KV; i risultati sono riportati sul relativo test report allegato al quality control plan QCP-JT60TF-ASG-90.13646.

Insulation sample

On a He-inlet sample, after the welding of the nozzle, the insulation procedure has been qualified, using fiberglass tape subsequently impregnated with epoxy resin (see fig. 12)

On the sample, after impregnation, the electrical test at 3.8 KV and 5.0 KV have been successfully performed; the relevant results are included in the test report attached to the quality control plan QCP-JT60TF-ASG-90.13646.

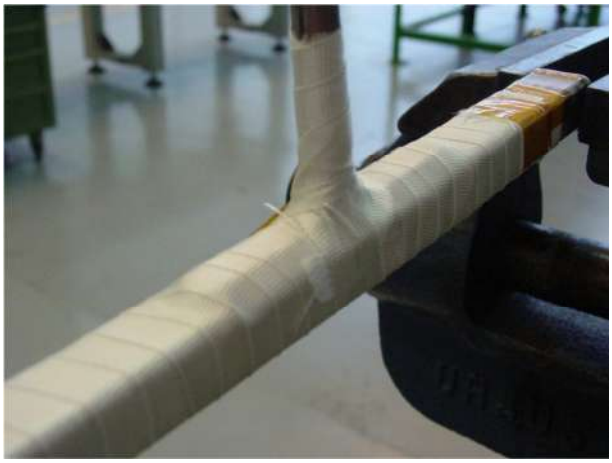

Fig. 12 – Campione He-inlet isolato / *He-inlet insulation sample*

3. PRE-CURVATURA CONDUTTORE / *CONDUCTOR PRE-BENDING*

Alcuni test eseguiti da CEA hanno dimostrato che l'applicazione di una pre-curvatura sul conduttore e sul bocchello, prima della saldatura dello stesso, consentono una riduzione delle deformazioni e dello stress residuo sulla saldatura (Rif. DOC. CEA n. I0000788623). Questa soluzione, abbinata alla sequenza di saldatura, fornisce una valida strategia per la riduzione dello stress residuo in alternativa alla lavorazione del cordone.
Sulla base di questi test, ASG ha proceduto alla progettazione ed alla costruzione dell'attrezzatura necessaria e alla realizzazione di campioni per verifica comparativa delle deformazioni residue.
L'attrezzatura, che consente di realizzare una pre-curvatura di ~0.4 mm sui ~120 mm di lunghezza del bocchello, è stata realizzata in modo da poter essere installata sul conduttore e impiegata nel corso della produzione dei DP. Vedere fig. 13

Some tests performed by CEA shown that a pre-bending on the conductor and the nozzle, before the welding of the nozzle, allows a reduction of the deformation and the residual stress on the welding (Ref. CEA Doc. N. I0000788623). Such solution, adopted with the proper welding sequence, is a reliable strategy for the residual stress reduction that can be applied instead of the welding seam machining.
On these basis, ASG as designed and realized the necessary tool as well as some sample for a comparative analysis of the residual deformation.
The tool, that allows a pre-bending of ~0.4 mm over the ~120 mm length of the nozzle, has been realized in such a way to be easily installed on the conductor and adopted during the DP manufacturing. See Fig. 13.

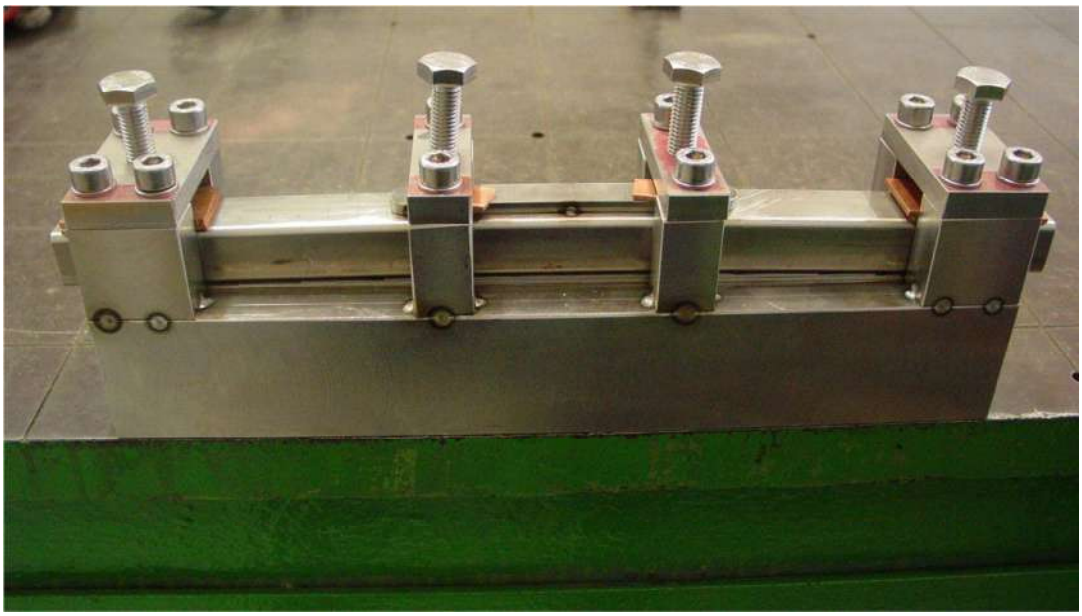

Fig. 13 – Attrezzatura pre-curvatura He-inlet / *Tool for He-inlet pre-bending*

I rilievi di planarità eseguiti sui campioni saldati hanno fornito un valore complessivo di planarità, pari a 0.6 mm sul campione dritto ed un valore di 0.16 mm su quello pre-curvato.

The flatness measurements on the welded sample gave an overall flatness of 0.6 mm on the straight sample and a value of 0.16 mm on the pre-bended one.

4. RISULTATI DEI TEST E CONCLUSIONI / *TEST RESULTS AND CONCLUSIONS*

Il processo di lavorazione meccanica per l'asportazione del jacket e della lamina di protezione degli strands è stata messa a punto con successo. L'analisi visiva del conduttore non presenta danni agli strands.

Dopo la messa a punto dei parametri di saldatura, è stata eseguita correttamente la qualifica del processo in presenza di personale di ENEA e dell'IIS in qualità di "Autorità Ente Terzo".
Il controllo della temperatura ha dimostrato che i valori sono ampiamente entro quelli richiesti dalla specifica tecnica che prescrive di non superare 500 ℃ per 30 sec.

Tutti i test atti a qualificare il processo di saldatura dell'He inlet sono stati eseguiti da ASG sotto la supervisione dell'IIS che ha successivamente provveduto a certificare le attività.
I risultati sono contenuti nei rapporti "Qualificazione Procedura di Saldatura" n.GD0028/12 e GD0029/12 emessi dall'IIS
Il controllo mediante liquidi penetranti e il test di tenuta a vuoto sono stai superati senza che venisse riscontrato alcun difetto.

La procedura di isolamento elettrico dell'He-inlet è stata qualificata ed i test elettrici sul campione isolato hanno dato esito positivo.

La procedura di pre-bending dei campioni è stata qualificata con esito positivo e verrà utilizzata nella produzione dei DP.

ENEA ha effettuato le misure di corrente critica su campioni di strand prelevati dalla zona termicamente alterata: non è stata rilavata alcuna degradazione del superconduttore.

The machining of the jacket and the manual removal of the s.s. protection wrapping has been performed successfully.
Visual inspection of the conductor didn't show any damage of the strands.

After preliminary test, the qualification process of He inlet welding has been performed successfully under witness of ENEA personnel and Third Party Authority personnel (Istituto Italiano della Saldatura - IIS).
Check of temperatures demonstrated that all the values are inside the requirements of technical specification, asking for temperature non exceeding 500℃ for 30 sec.

All the test dedicated to qualify the welding procedure have been performed by ASG under the witness of IIS that finally certified the activities.
The results of the test are collected in the final dossier id. nr. GD0028/12 e GD0029/12 issued by IIS

Dye penetrant test and He leak test gave very good results, no defects have been detected.

The procedure for the electrical insulation of the He-inlet has been qualified and the electrical test on the insulated sample gave positive results.

The pre-bending procedure has been successfully qualified and will be adopted in the DP manufacturing

ENEA performed the critical current measurements on strands samples extracted from the temperature affected zone: no degradation of the superconductor has been detected.

5. RIFERIMENTI / *REFERENCES*

a) Qualificazione Procedura di Saldatura / *Welding Procedure Qualification Record*
Certificato No. / *Certificate No.* GD0028/12 (IIS)
b) Qualificazione Procedura di Saldatura / *Welding Procedure Qualification Record*
Certificato No. / *Certificate No.* GD0029/12 (IIS)
c) Lay-out macrografie su campione di qualifica / *Macrographic examination lay-out on qualification sample*
Certificato No. / *Certificate No.* MA131014 (ASG)

ASG Superconductors

Titolo / title	Identificativo / document no.	Rev. / rev.	Pag. / page	Di / of
Test saldatura piastre per casse bobine JT-60SA	**700RM14134**	1	1	17

Identificativo Contratto ENEA / *ENEA Contractual ID no.*: **RT-JT60TF-ASG-14134**

Tipo doc. / *doc. type*	Emittente / *Issued by*	Edizione in lingua / *language*	Derivato da / *derived from*	Rev. / *rev.*
RT	GQL	ITA	/	/

Commessa / *job no.*	Progetto / *project*	Cliente / *client*
RS24-2053	JT-60SA	ENEA C.R. Frascati

Rev. / *rev.*	Motivo Revisione / *Reason for revision*
0	Emissione documento
1	Correzione velocità avanzamento (mm/min) in tabelle

Rev / *rev.*	St. / *st.*	Sc. / *sc.*	Preparato / *prepared*	Controllato / *checked*	Verificato / *checked*	Verificato / *checked*	Verificato / *checked*	Approvato / *approved*	Data / *date*
1			F. Terzi	S. Cuneo	P. Pesenti			G. Drago	20.05.2013

ASG Superconductors s.p.a. si riserva tutti i diritti su questo documento che non può essere riprodotto neppure parzialmente senza la sua autorizzazione scritta
ASG Superconductors s.p.a. reserves all rights on this document that can not be reproduced in any part without its written consent

SOMMARIO

1. INTRODUZIONE 3
2. DESCRIZIONE 3
1.1 Saldatura piastre AISI 316 L, spessore 20 mm 3
1.2 Saldatura piastra AISI 316 L, spessore 50 mm 7
3. RISULTATI DELLE PROVE E CONCLUSIONI 8
4. FOTO 10
4.1 Piastra N.1 10
4.2 Piastra N.4 11
4.3 Piastra N.5 11
5. GRAFICI 12

1. INTRODUZIONE

Nel presente documento vengono presentati i risultati delle prove di saldatura della piastre opportunamente lavorate con cianfrinatura per simulare la situazione di saldatura delle casse di contenimento delle bobine di JT60SA.

2. DESCRIZIONE

Le attività hanno riguardato la saldatura di piastre in AISI 316 L aventi spessori di 20 mm e 50 mm

1.1 Saldatura piastre AISI 316 L, spessore 20 mm

Le piastre hanno le seguenti caratteristiche:

- materiale: AISI 316 L
- dimensioni: 300 x 200 x 20 mm
- cianfrino: lavorazione a V di 30°, spalla = 0.0 mm e gap = 0.0 mm.

I provini (v. foto) sono stati assemblati posizionando, sotto alle piastre:

- una piastra inox di protezione a rovescio della saldatura, largh. 200 mm, sp. 3.0 mm
- n.4 tele di vetro sp. 0.5 mm, per uno spessore totale di 2.0 mm, a simulazione dell'isolamento contromassa della bobina
- una piastra di bachelite sp. 20 mm di supporto dell'assieme

Inoltre tra la piastra inox oggetto della saldatura e la *backing strip* viene fatto flussare gas azoto come gas di protezione a rovescio della saldatura.

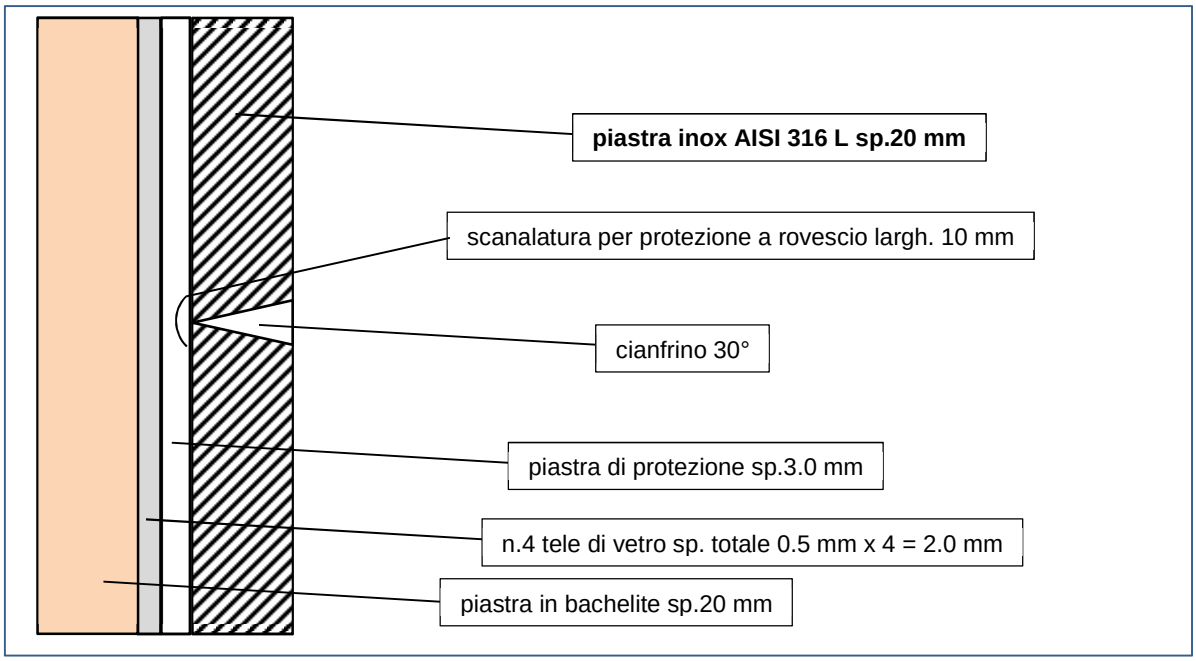

Fig. 1 – schema disposizione piastra sp. 20 mm per saldatura

Sono state realizzate 4 campagne di prove, ovvero 4 piastre.
In alcuni casi, per ciascuna prova, sono state adottate due configurazioni differenti per quanto riguarda la piastra di protezione a rovescio (*backing strip*), come descritto in seguito per ciascuna delle 4 prove.

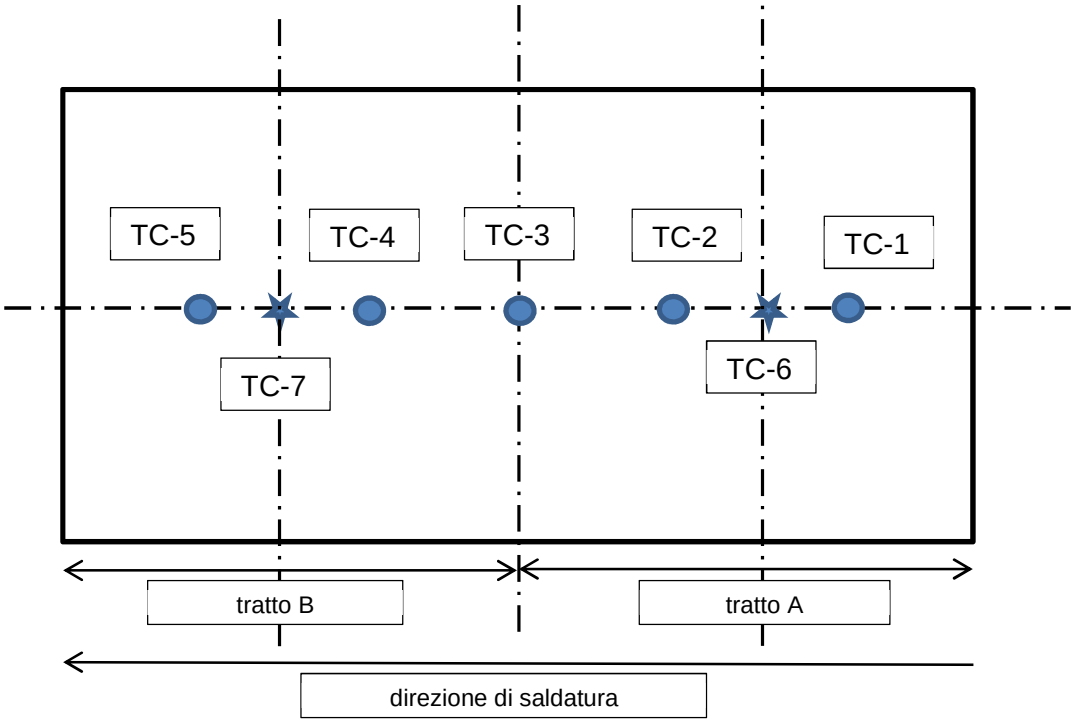

Fig. 2 – Schema disposizione termocoppie

La posizione delle termocoppie per il controllo delle temperature è la seguente:

- ✓ TC-1…TC-5 sono tra tela di vetro e bachelite distanziate tra loro di 50 mm
- ✓ TC-6 e TC-7 sono tra lamierino (*backing strip*) e tela di vetro, a distanza di 75 mm dal bordo piastra e distanziate tra loro di 150 mm.

Tale configurazione è stata utilizzata sia per le prove sulle piastre sp. 20 mm (piastre N.1-2-3-4), che per la prova con piastra sp. 50 mm. (piastra N.5)

Le prove effettuate sulle piastre N.1 e 2 sono state propedeutiche alla comprensione dell'influenza, sulla qualità del cordone di saldatura, della scanalatura presente sulla *backing strip* e di conseguenza anche della quantità di gas di protezione a rovescio.
Le prove eseguite sulle piastre N. 3 e 4 hanno invece avuto come scopo finale la definizione dei parametri ottimali di saldatura al fine di mantenere bassa la temperatura sulla tela di vetro.

Prima prova – Piastra N.1

Tratto A

- piastra di protezione a rovescio con scanalatura L=10 mm
- corrente I = 110 A DC

Tratto B

- piastra di protezione a rovescio piatta
- corrente I = 110 A DC

Risultato

Non conforme, mancata fusione dei lembi sulla 1° passata

Seconda prova – Piastra N.2

Tratto A

- piastra di protezione a rovescio con scanalatura L=20 mm
- corrente I = 125 A DC

Tratto B

- piastra di protezione a rovescio con scanalatura L=12 mm
- corrente I = 125 A DC

Risultato

Non conforme, mancata fusione dei lembi sulla 1° passata

Terza prova – Piastra N.3

Tratto A

- piastra di protezione a rovescio con scanalatura L=20 mm
- corrente I = 125 A DC

Tratto B

- piastra di protezione a rovescio con scanalatura L=12 mm
- corrente I = 125 A DC

Riguardo la piastra n.3, su entrambi i tratti, A e B, sono state eseguite 3 passate TIG quale prova di riempimento parziale del cianfrino.

I parametri utilizzati sono riassunti in Tabella 1:

Passata N.	Tipo processo	I (Amp.)	V (Volt)	Diam. filo (mm)	Vel. filo (mm/s)	Velocità avanzamento (mm/min)
1	TIG	150	-	1.6	-	65
2-3	TIG	150	-	2.4	-	100-110

Tabella 1 - Parametri saldatura piastra N.3 - sp.20 mm

Risultato

Si verifica mancata fusione dei lembi sulla 1° passata

Quarta prova – Piastra N.4

Tratto A

- piastra di protezione a rovescio con scanalatura L=12 mm, profondità 2 mm

Tratto B

- piastra di protezione a rovescio con scanalatura L=20 mm

Riguardo la piastra n.4, su entrambi i tratti sono state eseguite differenti passate fino al riempimento completo del cianfrino.

I parametri utilizzati sono riassunti in Tabella 2:

Passata N.	Tipo processo	I (Amp.)	V (Volt)	Diam. filo (mm)	Vel. filo (mm/s)	Velocità avanzamento (mm/min)
1	TIG	150	-	1.6	-	65
2-3-4-5	TIG	150	-	2.4	-	100-110
6-7-8-9-10	MAG	177	21.6	1.2	6.1	300-350
11-12-13-14	MAG	150	20.4	1.2	5.4	300-350

Tabella 2 - Parametri saldatura piastra N.4 - sp. 20 mm

Risultato

Conforme

1.2 Saldatura piastra AISI 316 L, spessore 50 mm

La piastra ha le seguenti caratteristiche:

- materiale: AISI 316 L
- dimensioni: 300 x 200 x 50 mm
- cianfrino: lavorazione a V 15° e 30° (v. disegno di dettaglio), spalla = 1.0 mm e gap = 0.0 mm.

Il provino è stato assemblato posizionando, sotto alle piastra:

- una piastra inox di protezione a rovescio della saldatura, largh. 200 mm, sp. 5.0 mm
- n.4 tele di vetro sp.= 0.5 mm, per uno spessore totale di 2.0 mm, a simulazione dell'isolamento contromassa della bobina
- una piastra di bachelite sp. 20 mm di supporto dell'assieme
- una piastra inox sp. 20 mm di supporto dell'assieme

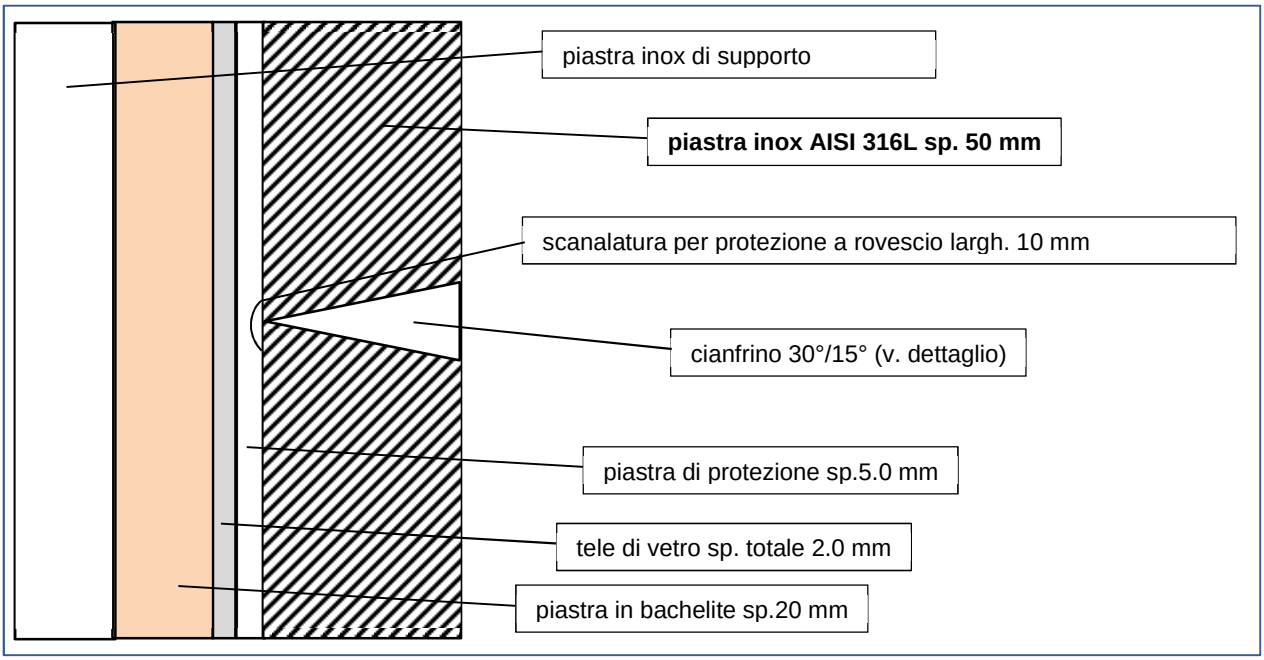

Fig. 3 – Schema disposizione piastra sp. 50 mm per saldatura

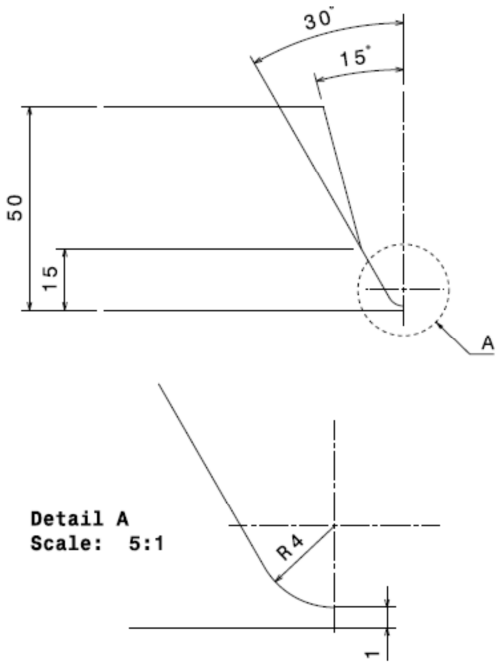

Fig. 4 – Dettaglio della lavorazione del cianfrino sulla piastra sp. 50 mm

I parametri utilizzati sono riassunti in Tabella 3:

Passata N.	Tipo processo	I (Amp.)	V (Volt)	Diam. filo (mm)	Vel. filo (mm/s)	Velocità avanzamento (mm/min)
1	TIG	110	-	1.6	-	60
2-3-4-5	TIG	130	-	2.4	-	100-90-100-90
6-7-8-9	MAG	170	22.2	1.2	-	280-250-280-250
10-11-12	MAG	170	22.2	1.2	-	340-340-320
13 → 53	MAG	170	22.2	1.2	-	-

Tabella 3 – Parametri saldatura piastra N.5 - sp.50 mm

3. RISULTATI DELLE PROVE E CONCLUSIONI

Durante la saldatura sono state registrate le temperature rilevate dalle termocoppie installate sulle piastre secondo lo schema di Fig.2. Nei grafici sono riportate le temperature registrate durante la 1° passata che ovviamente è la più critica dal punto di vista dell'innalzamento della temperatura essendo il cordone più vicino alle termocoppie.

Le temperature massime sono state rilevate dalle termocoppie posizionate tra la *backing-strip* e la tela di vetro, identificate con TC-6 e TC-7.

Nel caso della **piastra N.1**, relativa quindi alla prima prova del programma di pre-qualifica, si possono evidenziare:

a) picchi di temperatura tra 300 e 350°C registrati dalla TC-7 i quali, comunque, hanno durata limitata a circa 11 sec;

b) picchi con T>250°C di durata massima intorno a 80 sec.

Alcuni picchi a 600-700°C sono dovuti a *spikes* causati dalla macchina di saldatura a TIG.

Le **piastre N.2 e N.3** non hanno dato risultati soddisfacenti e il processo di saldatura è stato interrotto dopo la 3° passata senza, quindi, completare il riempimento del cianfrino.

Prendendo in considerazione la **piastra N.4**, ovvero l'ultima della campagna di prove su spessore 20 mm, si nota una notevole diminuzione delle temperatura registrata dalle termocoppie a conferma del raggiungimento dei parametri ottimali, in termini di velocità di avanzamento e di corrente, per la realizzazione della saldatura su tale spessore.

Le temperature registrate si sono mantenute tutte inferiori a 100°C.

I parametri utilizzati sono riassunti nella precedente Tabella 3.

Riguardo la **piastra N.5** sp. 50 mm, le temperature registrate dalle termocoppie TC-6 e TC-7 sono risultate inferiori a 150°C, sia per la prime 5 passate TIG che per le successive passate a filo continuo MIG (i picchi superiori a 150°C sono dovuti a *spikes* della macchina di saldatura.

I risultati ottenuti sulla piastra N. 5 hanno dato esito conforme.

4. FOTO

4.1 Piastra N.1

1A

1B

1C

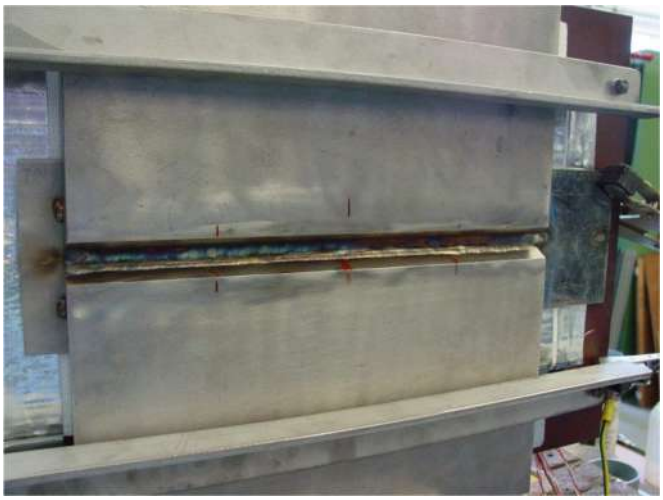

1D

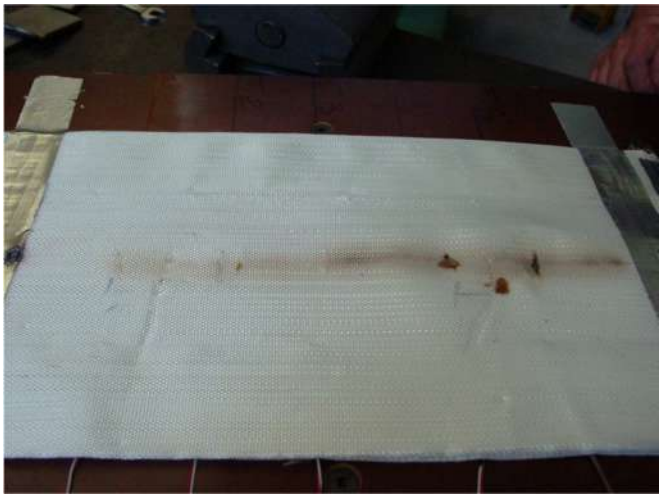

1E

1F

4.2 Piastra N.4

4A

4B

4C

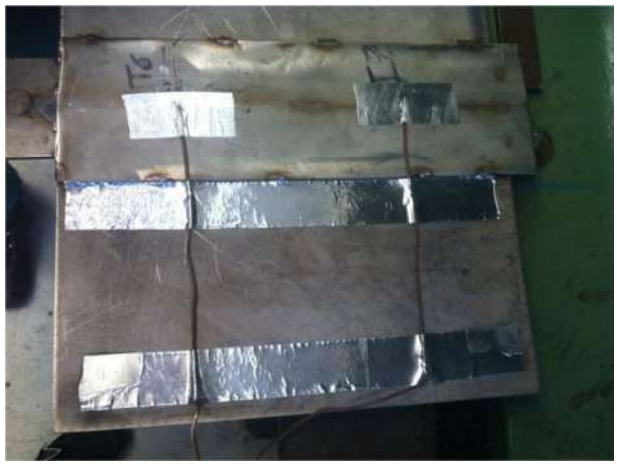

4D

4.3 Piastra N.5

5A

5. GRAFICI

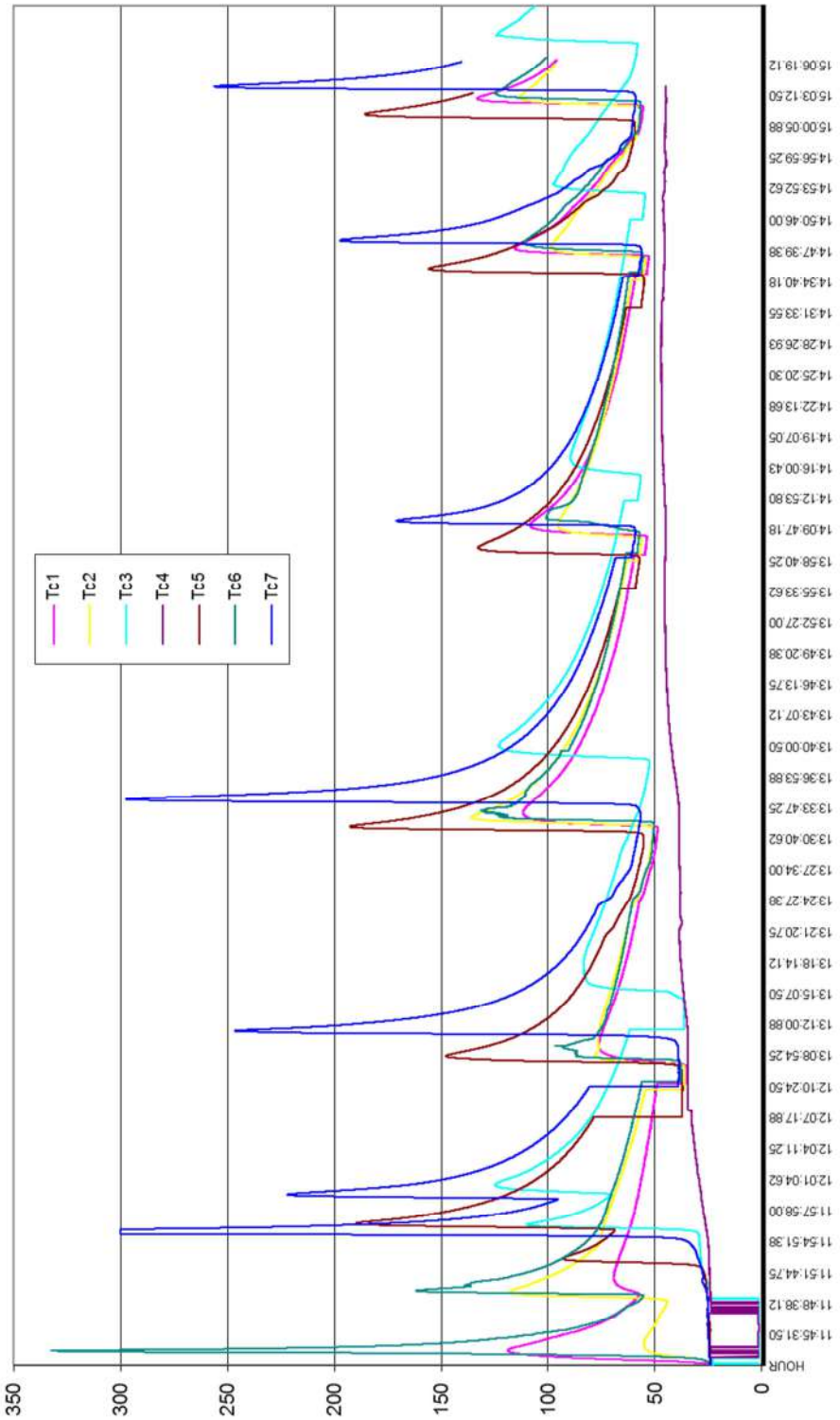

Grafico 1 - Piastra N.1 (sp. 20 mm) – 1° - 6° passata TIG

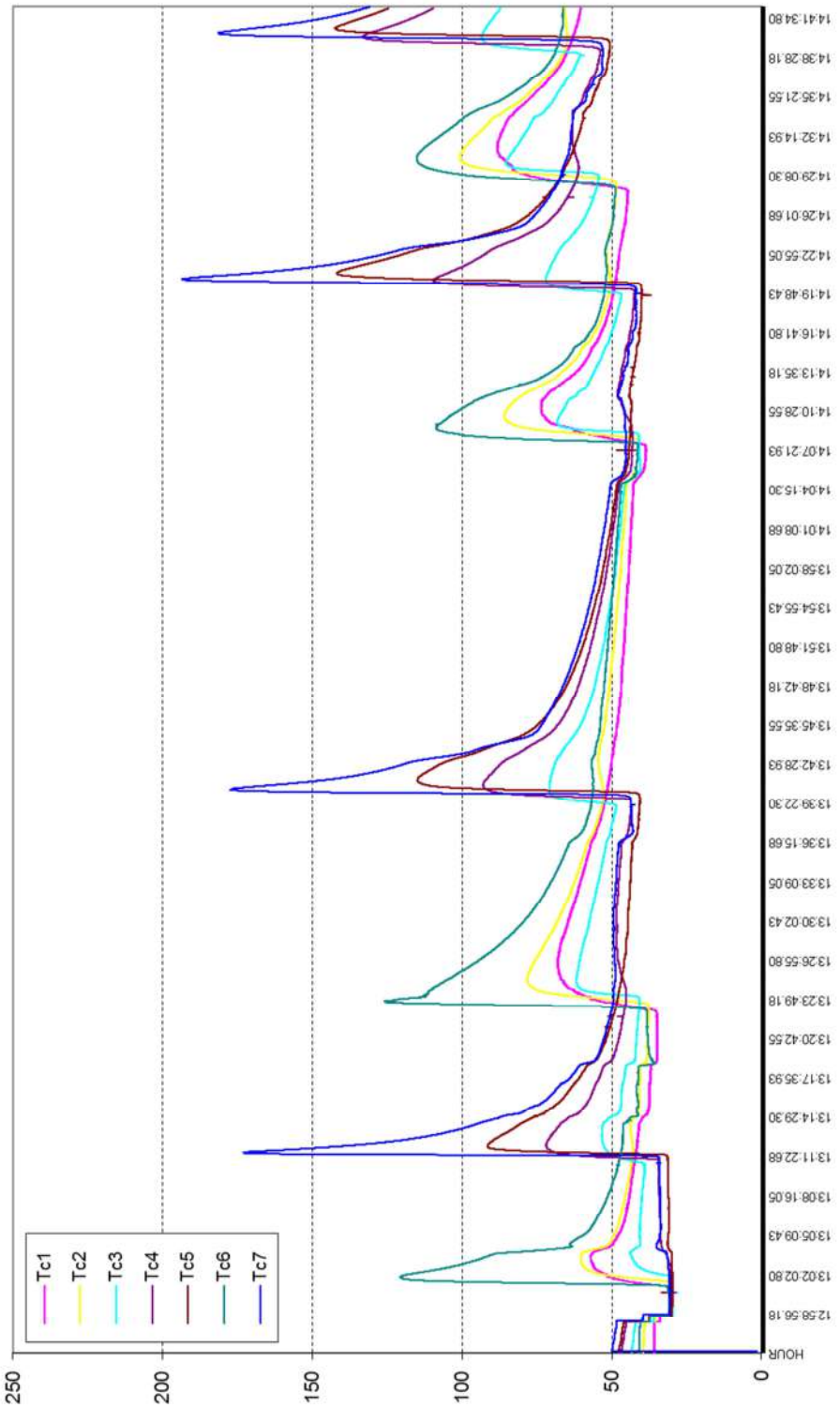

Grafico 2 - Piastra N.2 (sp. 20 mm) - 1° - 4° passata TIG

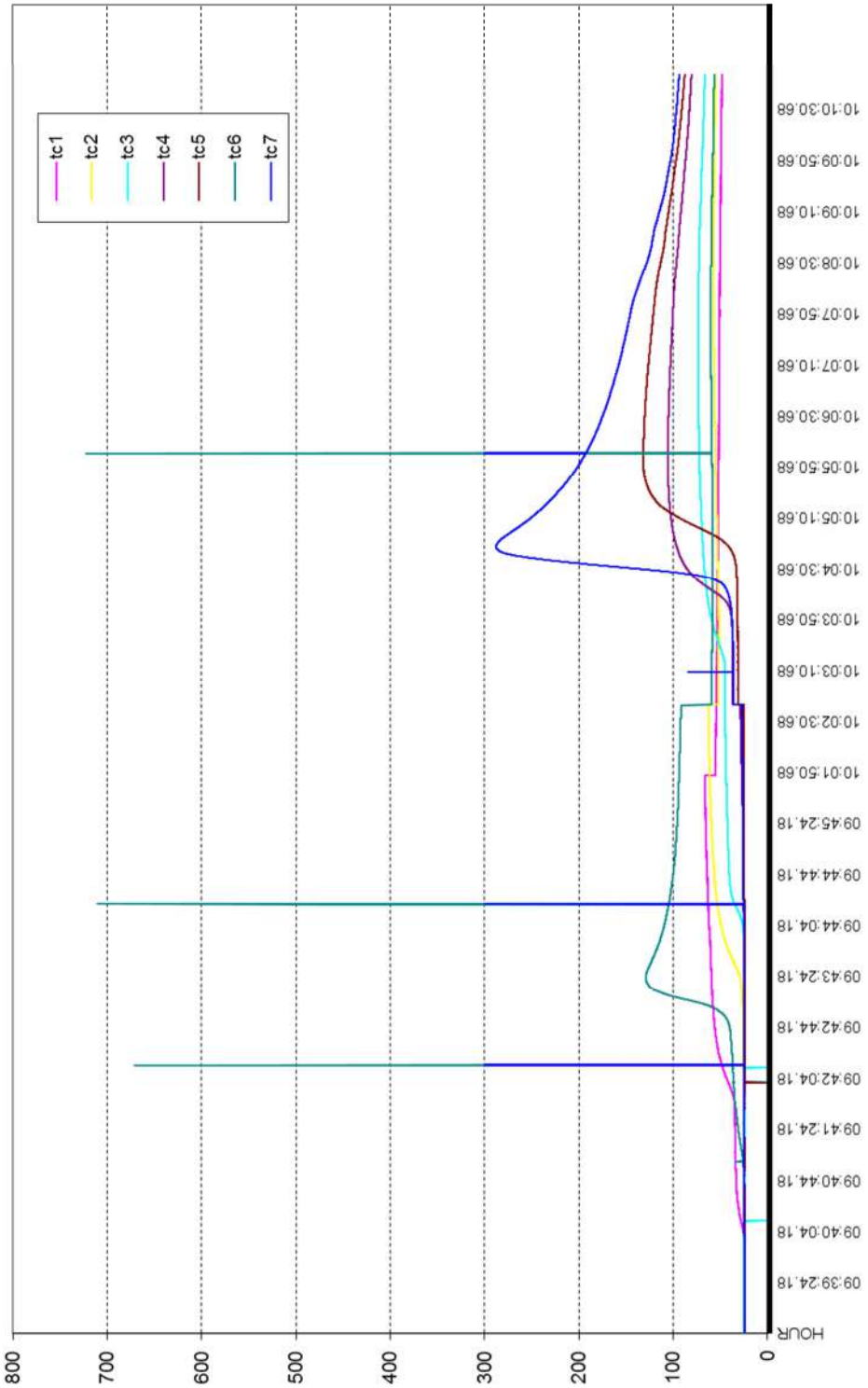

Grafico 3 - Piastra N.3 (sp. 20 mm) - 1° passata TIG

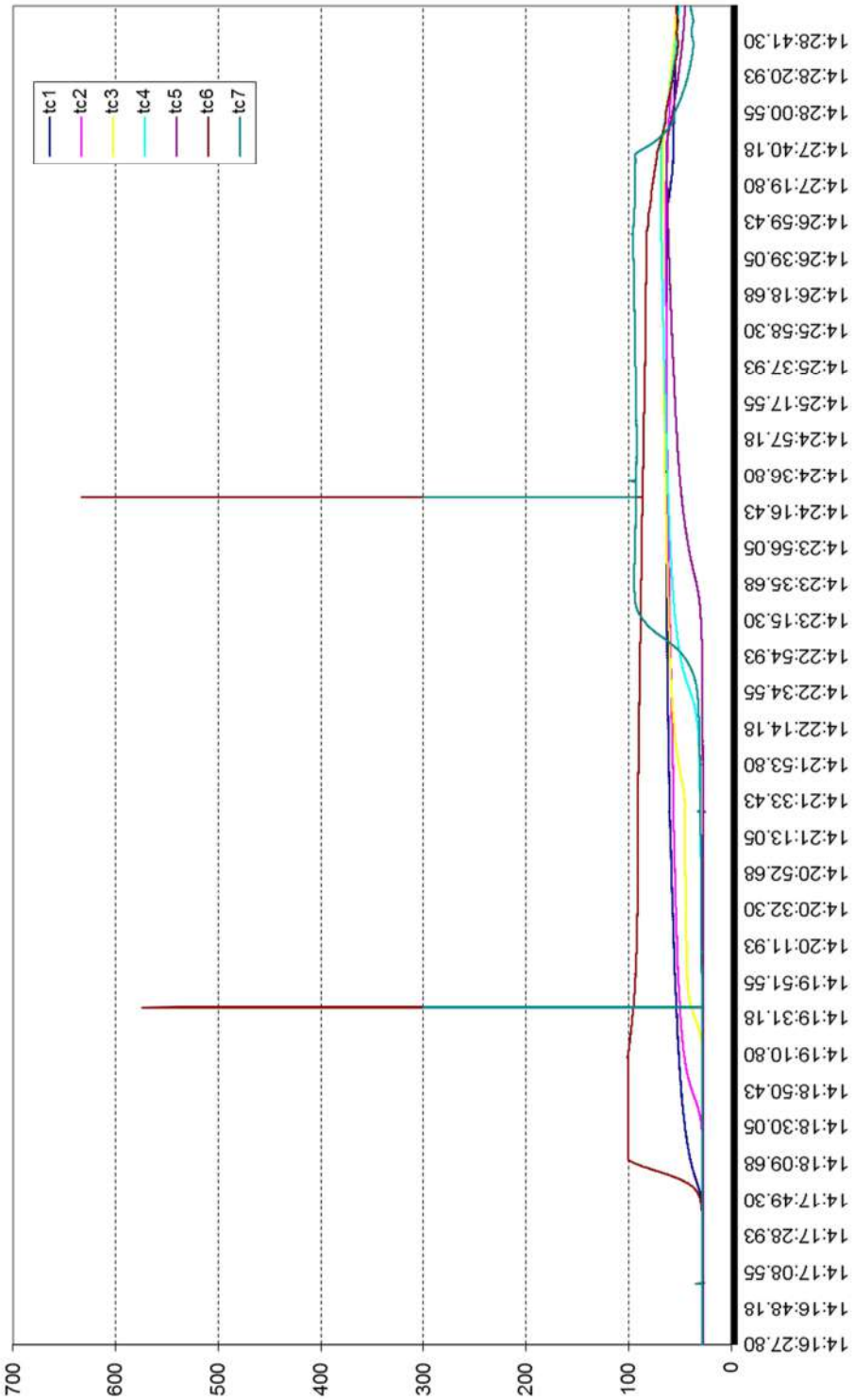

Grafico 4 - Piastra N.4 (sp. 20 mm)- 1° passata TIG

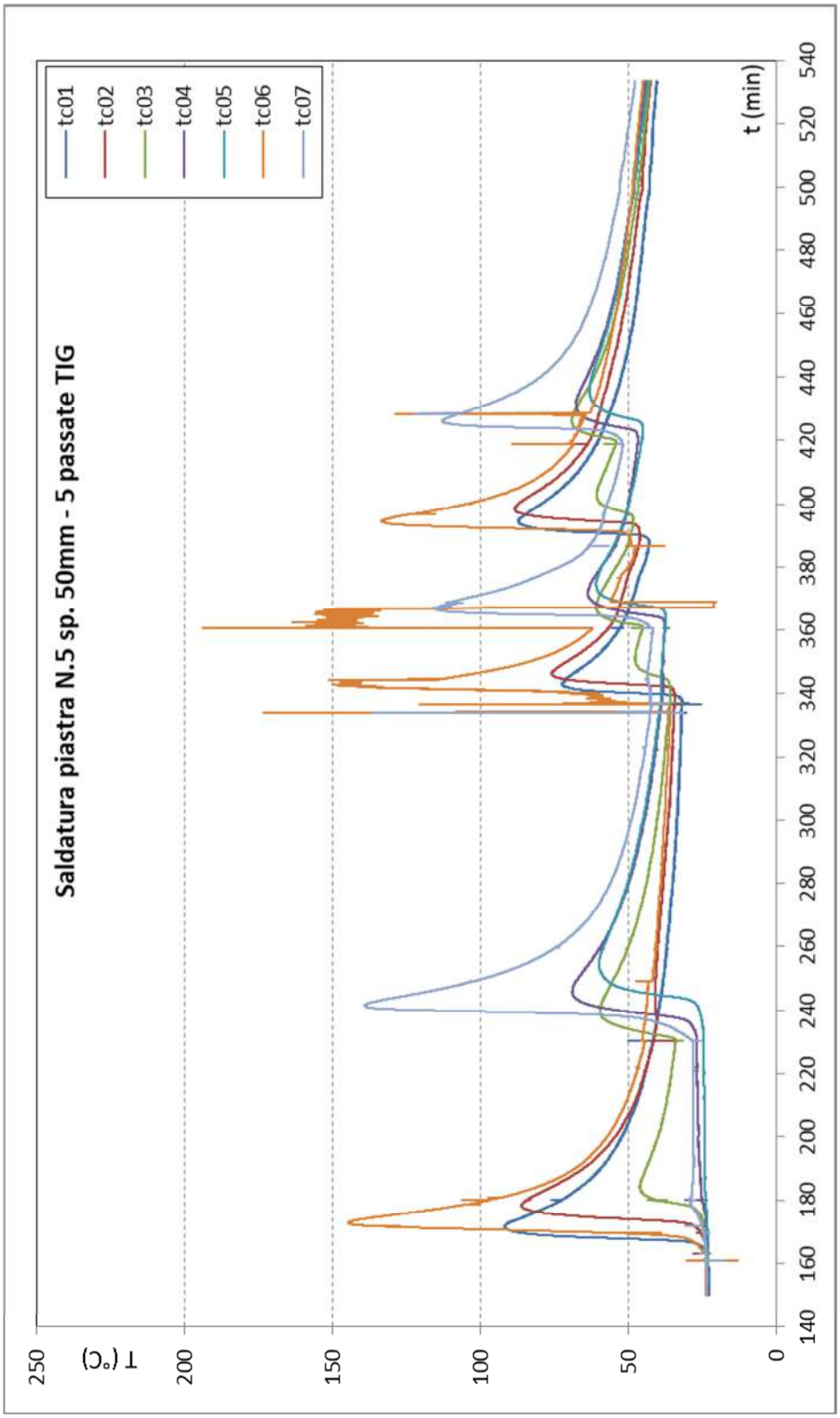

Grafico 5.1 - Piastra N.5 (sp. 50 mm) – 1° - 5° passata TIG

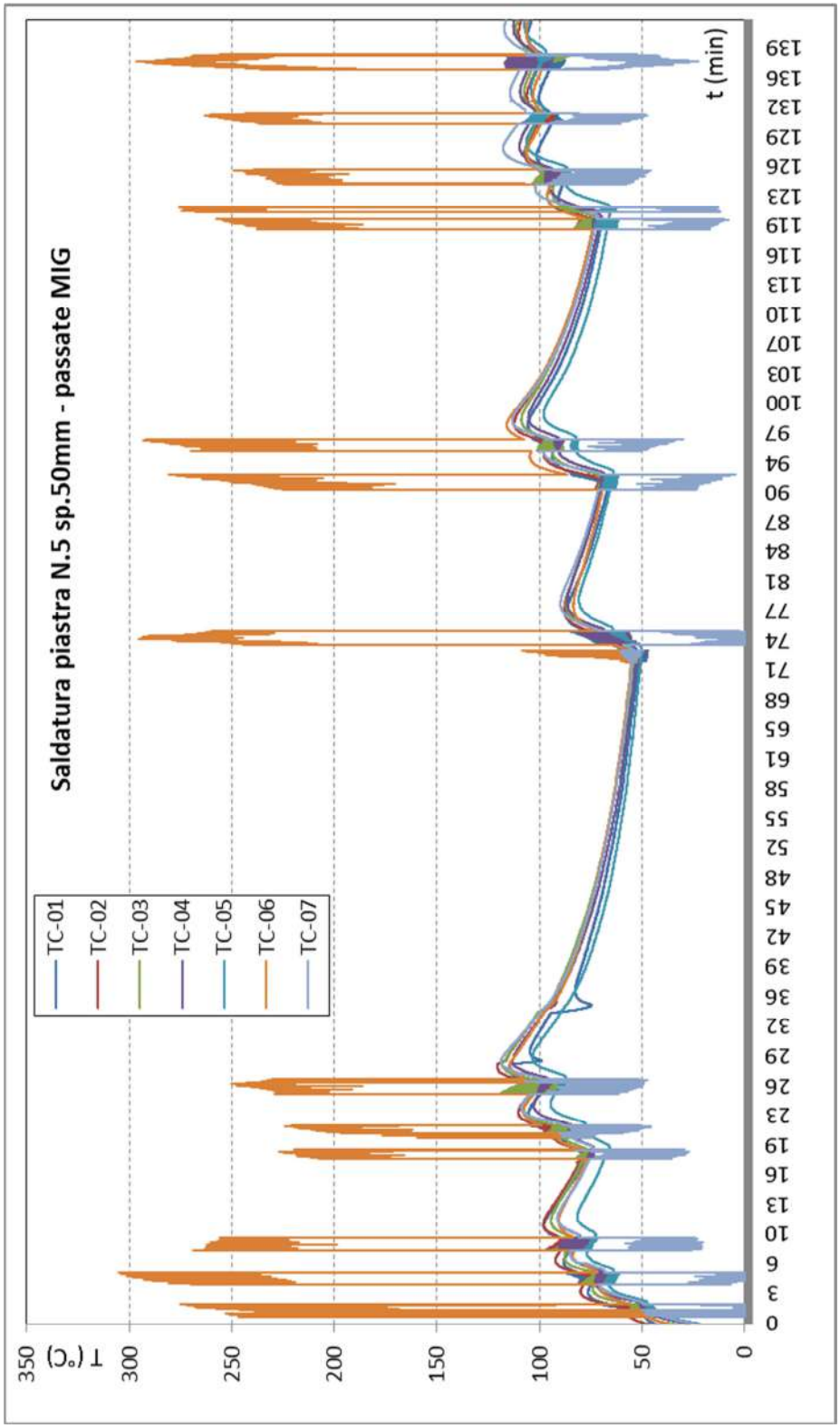

Grafico 5.2 - Piastra N.5 (sp. 50 mm) – passate MIG

ENEA ID	TR-JT60 TF-02		ENEA Classification	

Report of ASG JT-60SA electrical tests carried out in ENEA Superconductivity lab

Project Details	*This document is issued for the execution of the Agreement of Collaboration (AoC) between Fusion for Energy (F4E) and ENEA for the supply of 9 TF coils of JT-60SA*	
	JT-60SA DMS	BA_D_23NS58
Authors & Contributors	C.S. Fiamozzi Zignani	
Distribution List	Internal ENEA	**A.** UTFUS
	External	ASG-Superconductors, F4E, JAEA
Abstract	The measurements, carried out by ENEA Superconductivity lab., of the electrical resistance of the inner joint sample and two terminations manufactured by ASG Superconductors are reported.	

Rev.	Date	Issued by	Reviewed by	Approved by
0	08/07/2013	C.S. Fiamozzi-Zignani	L. Muzzi - A. Di Zenobio	A. della Corte

AGENZIA NAZIONALE PER LE NUOVE TECNOLOGIE, L'ENERGIA E LO SVILUPPO ECONOMICO SOSTENIBILE

Report on:
JT-60SA Joint Resistance Test.

C. Fiamozzi Zignani

July, 8th 2013

Title	**JT-60SA joint resistance measurements**		
Author	**C. Fiamozzi Zignani**		
Scope	Scope of the tests was to measure the electrical resistance of the inter-pancake joint prototype, manufactured by ASG, for the JT-60SA toroidal field (TF) magnets.		
	Emitted by Chiarasole Fiamozzi Zignani	**Revised by** - Luigi Muzzi - Aldo Di Zenobio	**Approved by** Antonio della Corte
Signatures			

Measurement set up

For the test of the JT60SA praying hands joint manufactured by ASG, a dedicated facility as been developed at ENEA in Superconductivity Laboratories.
The NbTi joint was fed by High Temperature Superconducting (HTS) 20kA Current Leads designed by CRPP. The copper terminations of the joint, manufactured by ASG as well, have been attached to the current leads cold ends by means of indium pressure connections (Figure 1). The joint and the leads have been inserted in a dedicated cryostat, whose flange has been equipped with liquid and gas helium inlets and with necessary signals connectors.
The testing conditions require the joint to be submerged in liquid helium and afterwards fed with several current plateaux up to 20kA. No background field is envisaged for the joint resistance test.
The cryostat has been instrumented with a Cryogenic liquid helium probe to verify the complete covering of the JT60SA sample (which correspond to 630mm of liquid helium). Two Cernox thermometers, calibrated by Lakeshore, have been placed upon terminations to monitor the temperature of the joint during measurements.
During measurements, the HTS current leads were cooled by means of helium gas flow supplied by a dedicated cryogenic circuit capable to provide flows up to 1.2g/s with temperatures from 20K up to 90K . Helium gas feed the leads heat exchanger and comes out from the leads' heads before reaching the mass flow meters. The HTS current leads have been instrumented with several thermometers and voltage taps in order to monitor their behaviour during current plateaux and to protect them from thermal runaway and quench. In the sketch in Figure 2, all voltage signals and temperatures from leads and joint which were acquired during measurements have been indicated.
A dedicated Data Acquisition System (DAS) has been developed at ENEA in order to observe and acquire signals during measurements. In particular a specific National Instrument (NI) LabView 9.0 VI has been implemented which displays the temperatures, the He flows and the voltages behaviour during cool down and registers the data from each measurement.
The joint resistance has been obtained by means of four probes measurements. Two couples of voltage taps were soldered by ASG on the cable jacket on the two sides of the NbTi joint. Voltage signals, helium flows and differential pressures in the current leads heat exchanger, as well as part of the thermometers, were acquired by means of a NI SCXI device, connected to the acquisition PC by means of a SH 6868 cable. The acquisition PC mounted both a NI PCI 6052E board and a GPIB board; most of thermometers were in fact read by means of 2 Lakeshore 218 devices in which the proper calibration curves have been uploaded for each Cernox or PT100 sensor. During all measurements, both the HTS modules and the heat exchangers of current leads were protected from quench by means of a dedicated quench detector device which monitor the voltages across the HTS module and the heat exchanger of both current leads. This tool has been implemented in order to be capable voltage thresholds arrangements from 3 to 200mV. When the threshold is reached, a signal is send to the power supply, which is shut down within less than 100ms.

Measurements results

Several measurement campaigns have been performed on the JT60SA joint, in order to evaluate its resistance. In the following, a significant selection of the analysis performed on acquired data is shown. The post processing has been performed by means of OriginPro 8 software.
The measured JT60SA joint resistance is 2.25±0.15nΩ.
For the determination of the joint resistance, we only took into consideration those measurements in which the helium level inside the cryostat was at least enough high to completely cover the joint.

Figure 1: The connection among the copper terminations and the current leads has been realized by means of aluminium shoes, with the interpositions of indium wires on the contact surface.

This ensures that the void fraction inside the cable jacket was filled with liquid helium during current ramps and plateaux, and consequently that the whole joint remains at the stable temperature of 4.2K. This is also confirmed by the temperature readings of the 2 Cernox thermometers placed upon copper terminations. However, the analysis evidenced that the liquid helium level was not crucial for the estimation of the joint resistance in the operating conditions, and even when few centimetres of joint surface were uncovered, the measured resistance value did not change.

In the determination of the joint resistance, we disregarded those measurements in which the current plateaux were not long enough to permit to the inductive voltages arising from the current ramp to be completely discharged. We only took into consideration completely stable voltage signals. Of the two couples of voltage taps soldered by ASG on the joint, named during tests preparation Vj1 and Vj2, one (Vj1) has been disregarded after file analysis, as often showed a small but not negligible drift during long current plateaux, probably due to thermocouple voltages arising at the connector level due to temperature variations inside the cryostat.

Small variations in the measured joint resistance, up to 0.15nΩ, between measurements at different current levels, are likely to arise due to internal current redistribution in the JT60SA cable cross

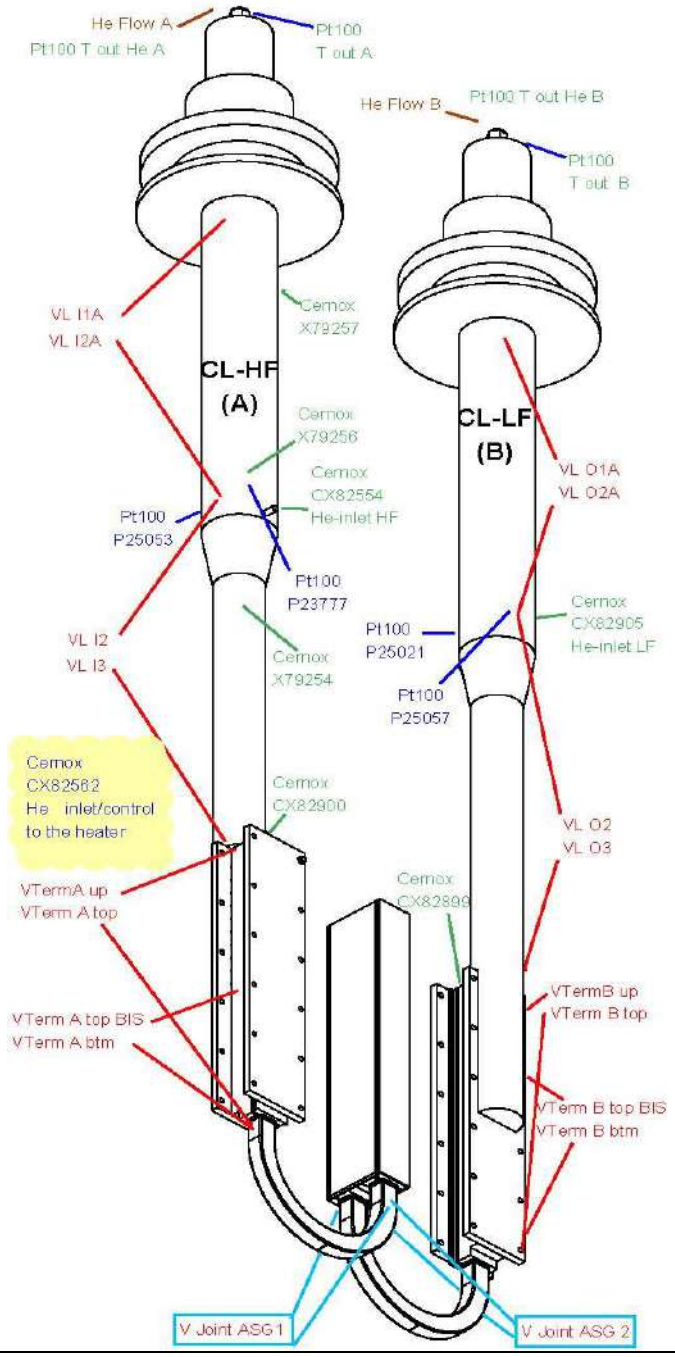

Figure 2: A sketch of JT60SA Joint and HTS current leads instrumentation during measurements.

section, which is capable of carrying higher current respect to the ones used during these measurements. The equivalent contact surface, which is up to the joint resistance, could in fact be changing, due to these current redistribution. Anyhow, these small variations are in the same order of magnitude of the measurement's error, and do not influence the results. This has been also confirmed by the fact that increasing the current ramp rate from 2000 A/s up to 15000A/s, the joint resistance variation is negligible.

For the resistance determination from the ratio between voltage and current across the joint, the corresponding offset, if present, has been subtracted from each signal during data post processing. In Figures 3-7, the ratio between the voltage measured by voltage taps Vj2 and the current across the joint is shown, together with the current itself, for several data files. The measured value of the joint resistance correspond to the value of this ratio during the current plateaux. In those

measurements in which several current plateaux where performed, the resistance value was also obtained plotting the measured voltage versus current across the joint and considering the slope of the line which connects the points of minimum voltage for each current, which correspond to the compete discharge of the inductive voltage due to current ramp. In Figure 8 are evidenced, for the file 14062013_F, the part of the measured voltages that are taken into consideration in view of the determination of the minimum voltages for each current plateaux.. This kind of analysis, shown in Figures 9-12, has the benefit of being independent from offset subtraction.

Besides the joint resistance, also the resistances of the two terminations have been measured. Their values are RTA=2.5±0.15nΩ and RTB=2±0.15nΩ, where RTA and RTB correspond to the resistances of the terminations connected to the leads named lead A and lead B respectively. In Figures 13, 14, the ratio between the voltages VTA and VTB across terminations and the current are shown together with the current itself. As for the joint, the values of the terminations resistances correspond to the values of these ratios during the current plateaux. In Figures 15, 16 the slopes of the lines which connect the points of minimum voltage for each current are shown. The values of these slopes correspond to the measured termination resistances.

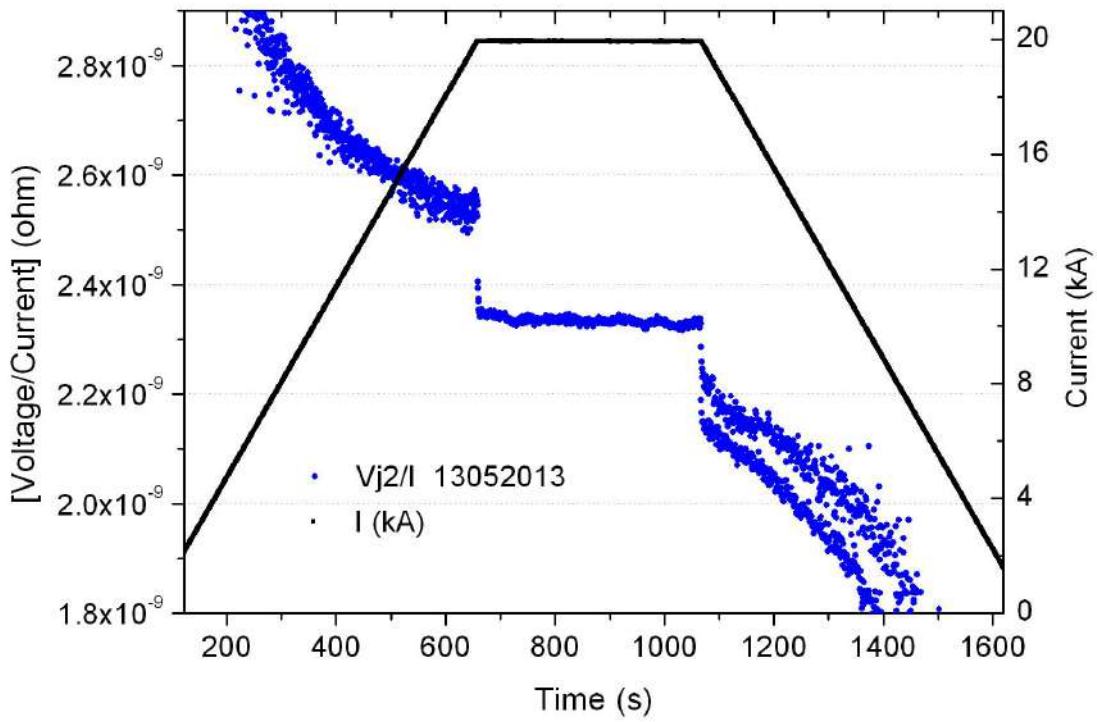

Figure 3: Ratio between the measured voltage Vj2 and the measured current across JT60SA joint and current during run 13052013 together with current.

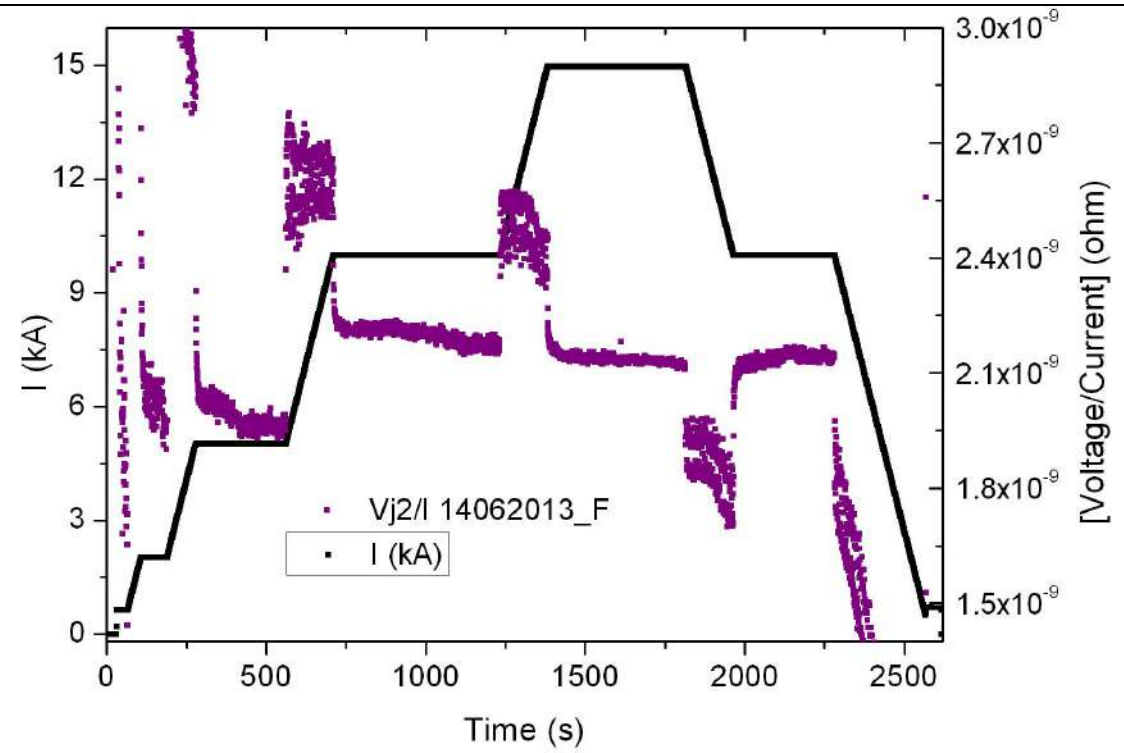

Figure 4: Ratio between the measured voltage Vj2 and the measured current across JT60SA joint and current during run 14062013_F together with current.

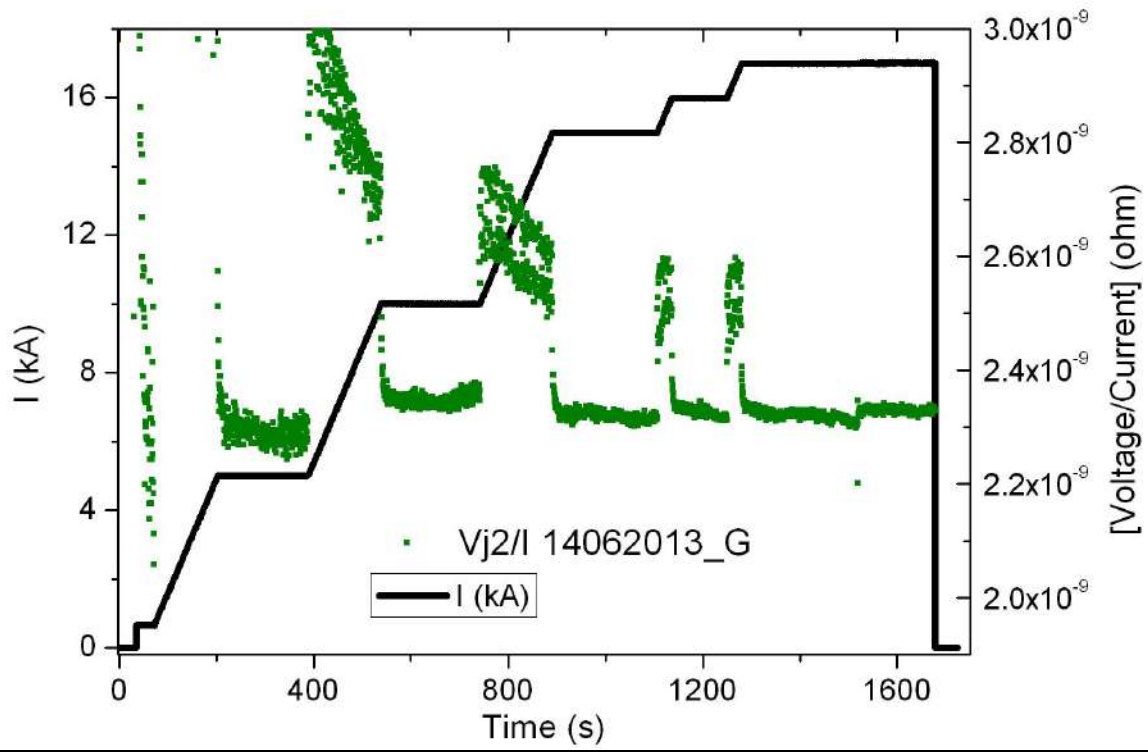

Figure 5: Ratio between the measured voltage Vj2 and the measured current across JT60SA joint and current during run 14062013_G together with current.

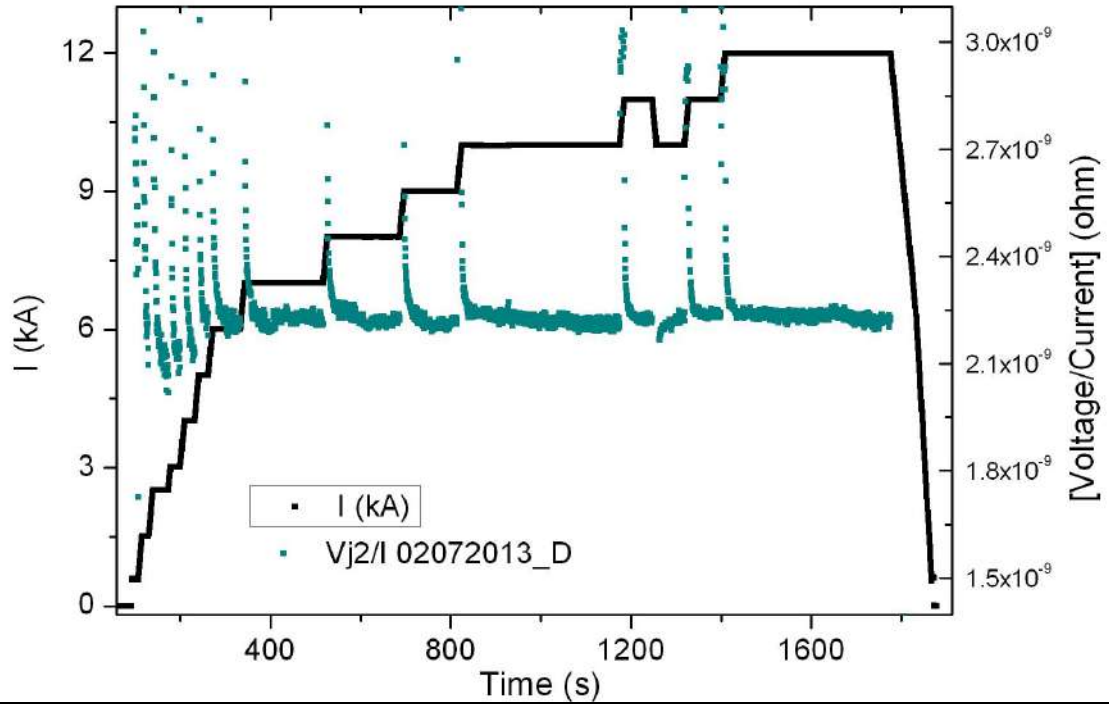

Figure 6: Ratio between the measured voltage Vj2 and the measured current across JT60SA joint and current during run 02072013_D together with current.

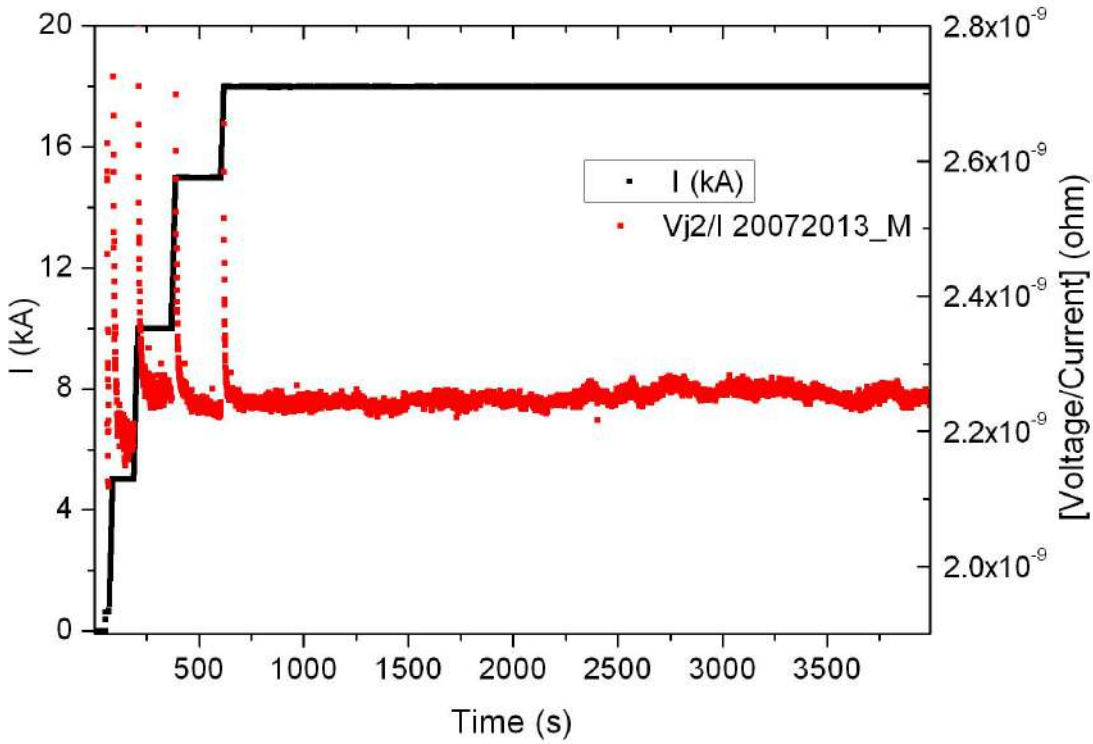

Figure 7: Ratio between the measured voltage Vj2 and the measured current across JT60SA joint and current during run 02072013_M together with current.

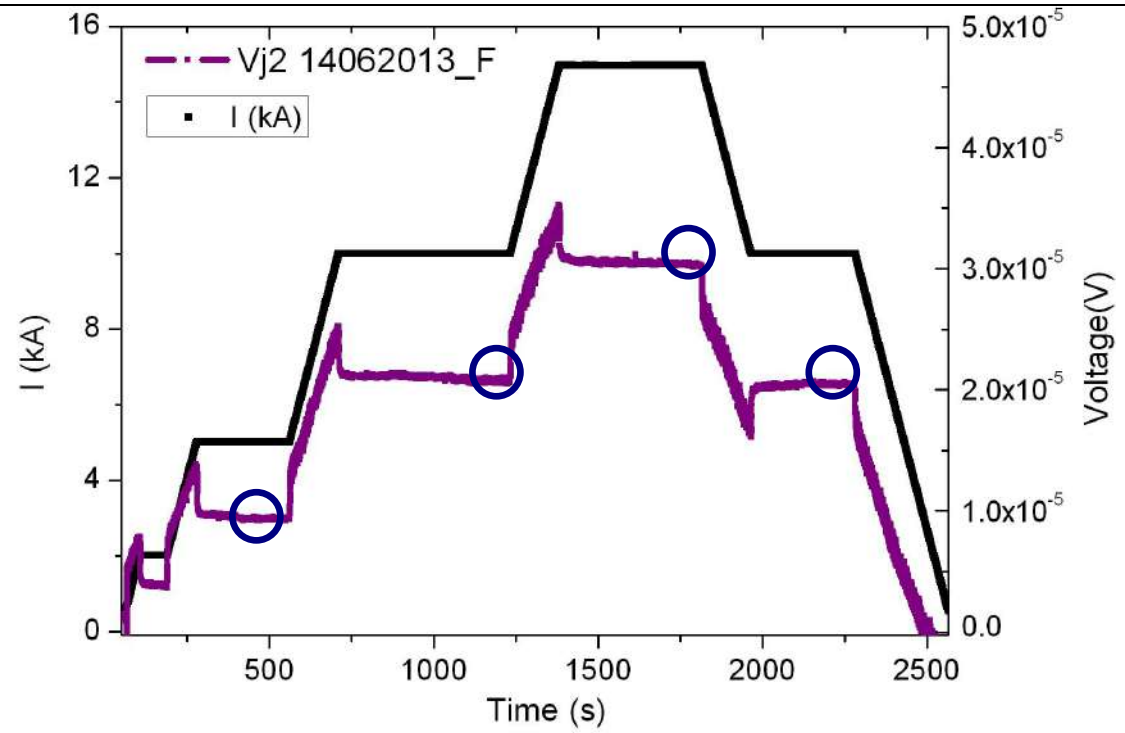

Figure 8: Measured voltage across taps Vj2 together with current across JT60SA joint during run 14062013_F. The blue circles evidence the parts of the voltage signal that correspond to the end of the current plateaux and that are used in post-processing to obtain the resistance values as the slope of the line that connects the points of minimum voltage for each current.

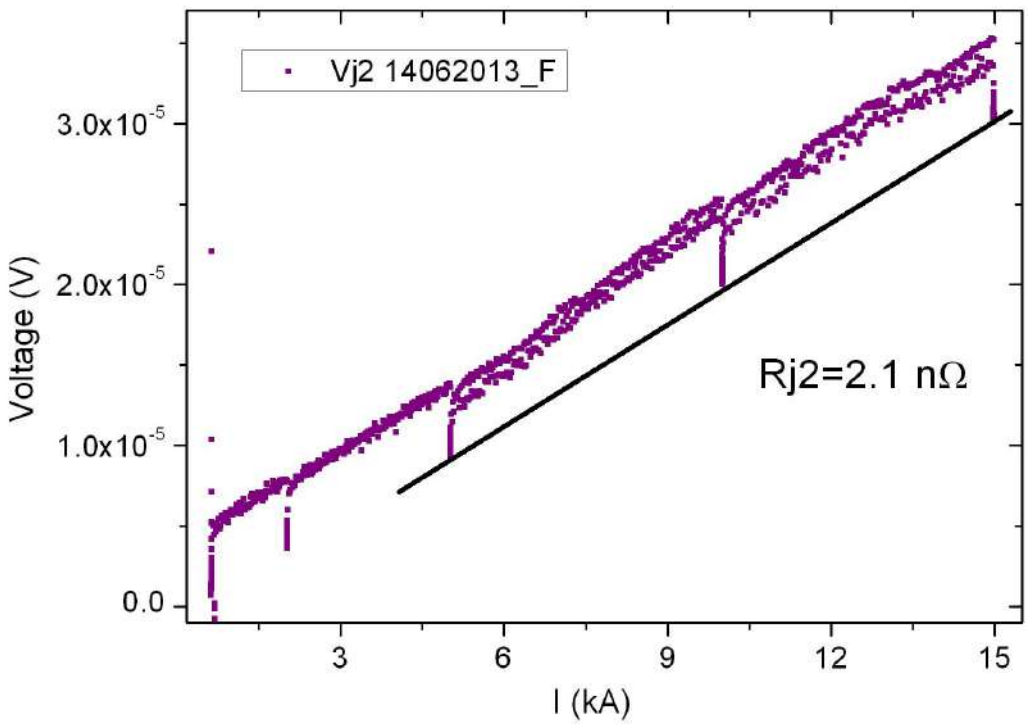

Figure 9: Measured voltage Vj2 across JT60SA joint versus current during run 16062013_F. The joint resistance value is obtained by the slope of the line that connects the points of minimum voltage for each current plateaux.

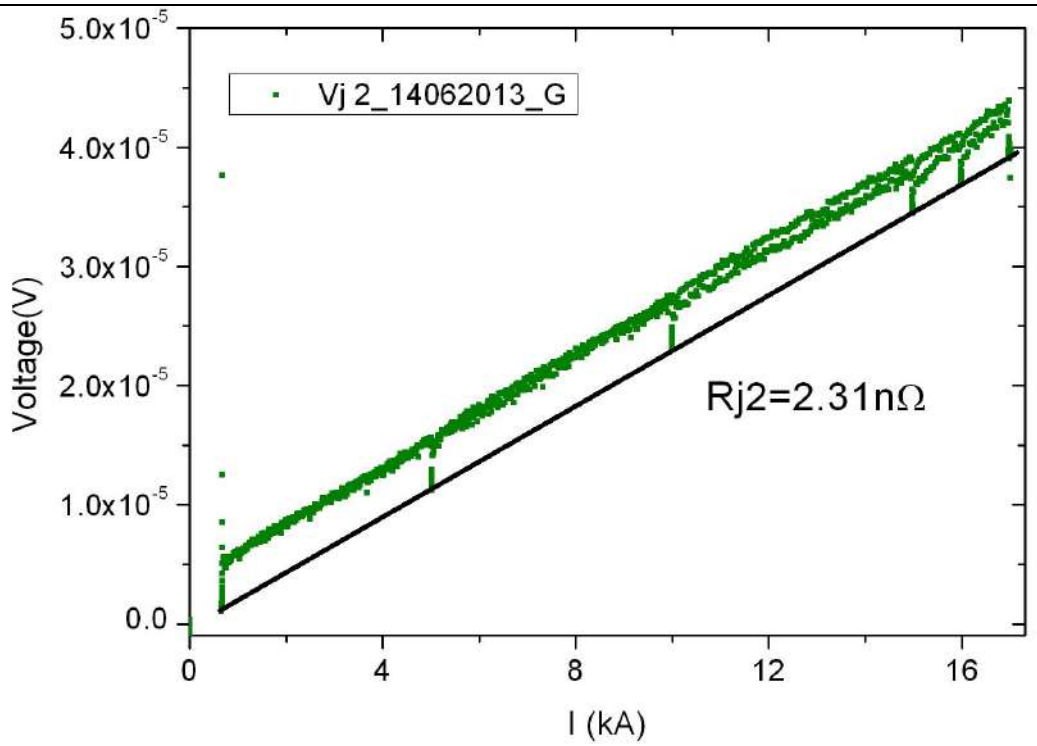

Figure 10: Measured voltage Vj2 across JT60SA joint versus current during run 14062013_G. The joint resistance value is obtained by the slope of the line that connects the points of minimum voltage for each current plateaux.

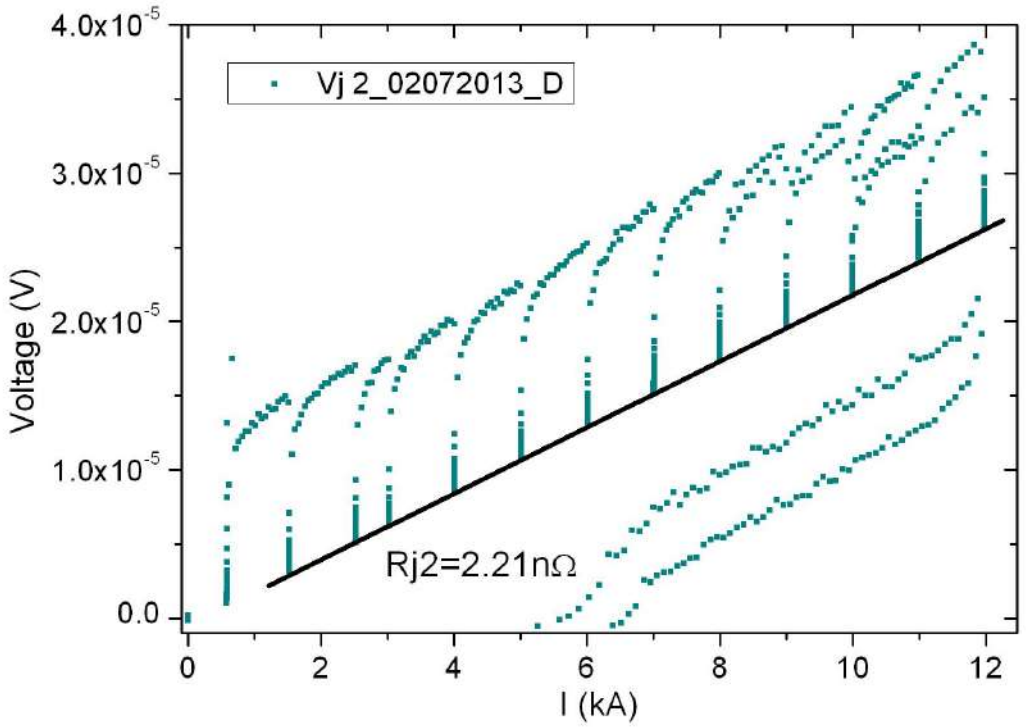

Figure 11: Measured voltage Vj2 across JT60SA joint versus current during run 02072013_D. The joint resistance value is obtained by the slope of the line that connects the points of minimum voltage for each current plateaux.

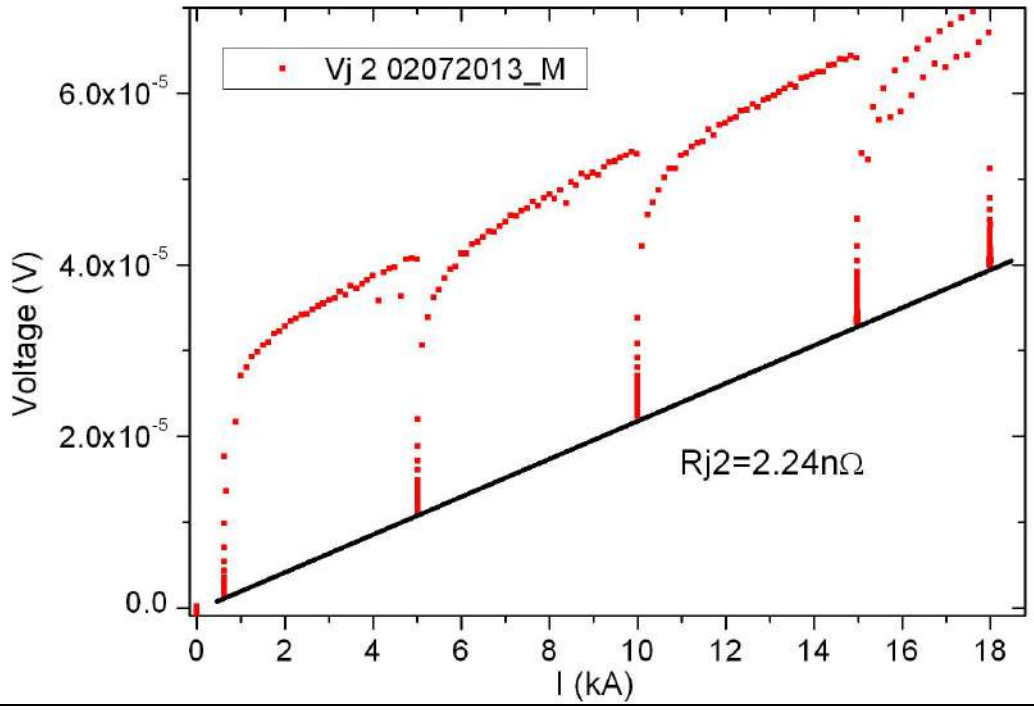

Figure 12: Measured voltage Vj2 across JT60SA joint versus current during run 02072013_M. The joint resistance value is obtained by the slope of the line that connects the points of minimum voltage for each current plateaux.

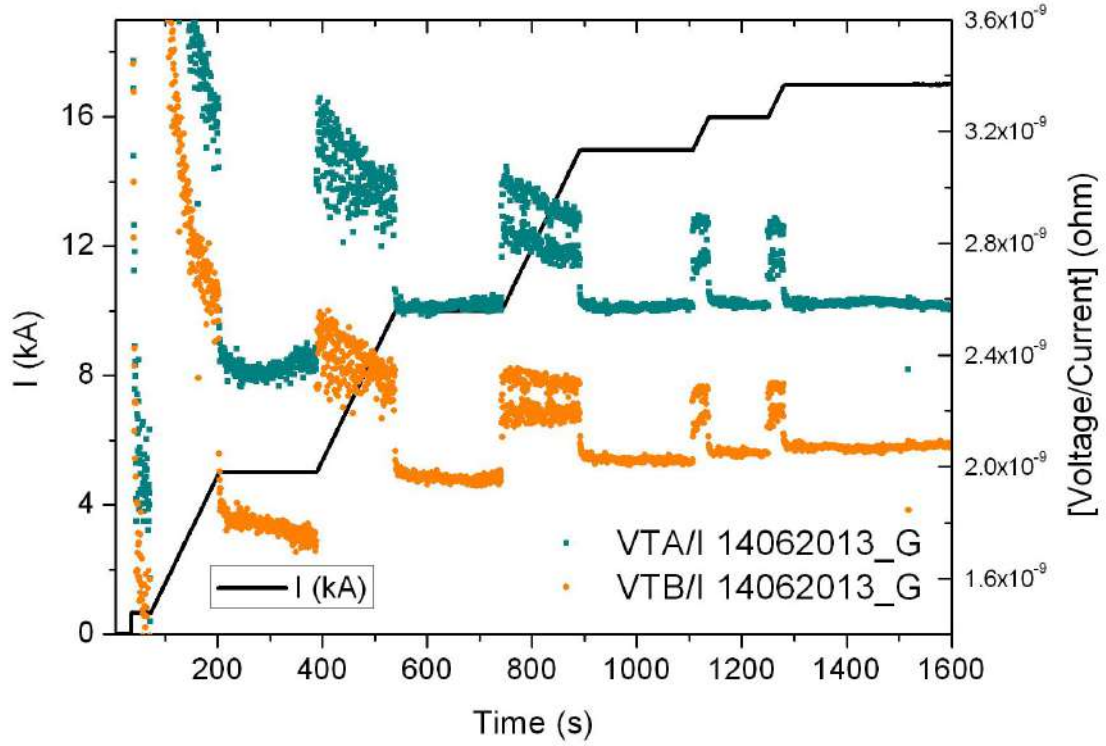

Figure 13: Ratio between the measured voltages VTA and VTB and the measured current across JT60SA joint together with current during run 14062013_G.

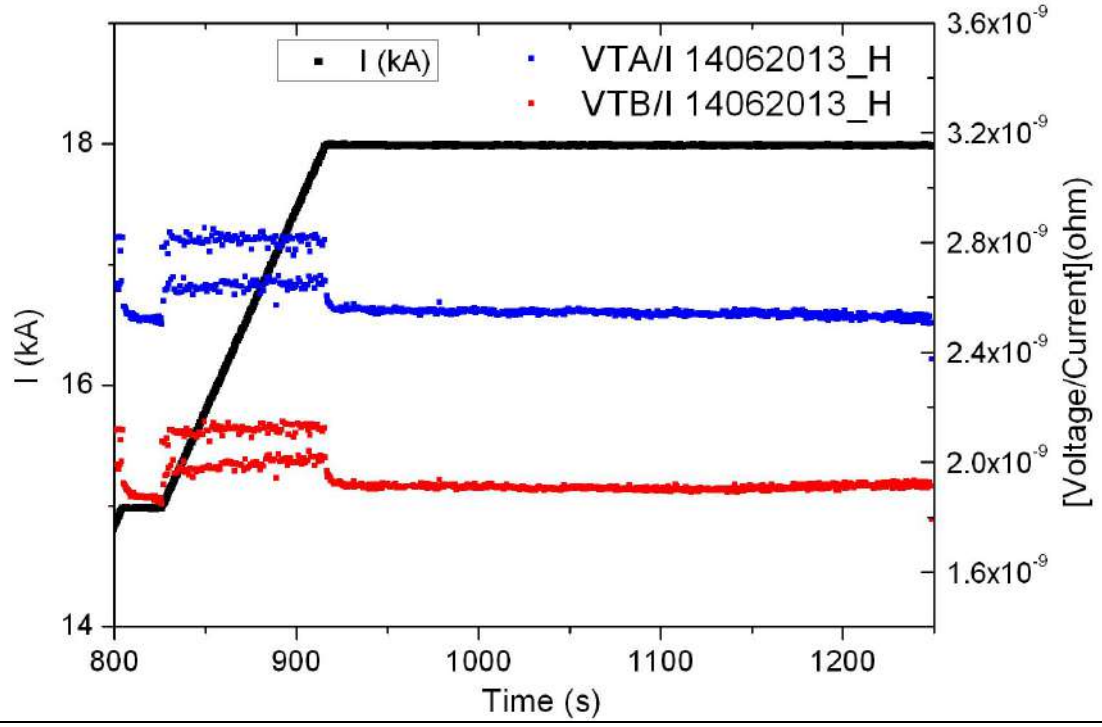

Figure 14: Ratio between the measured voltages VTA and VTB and the measured current across JT60SA joint together with current during run 14062013_H.

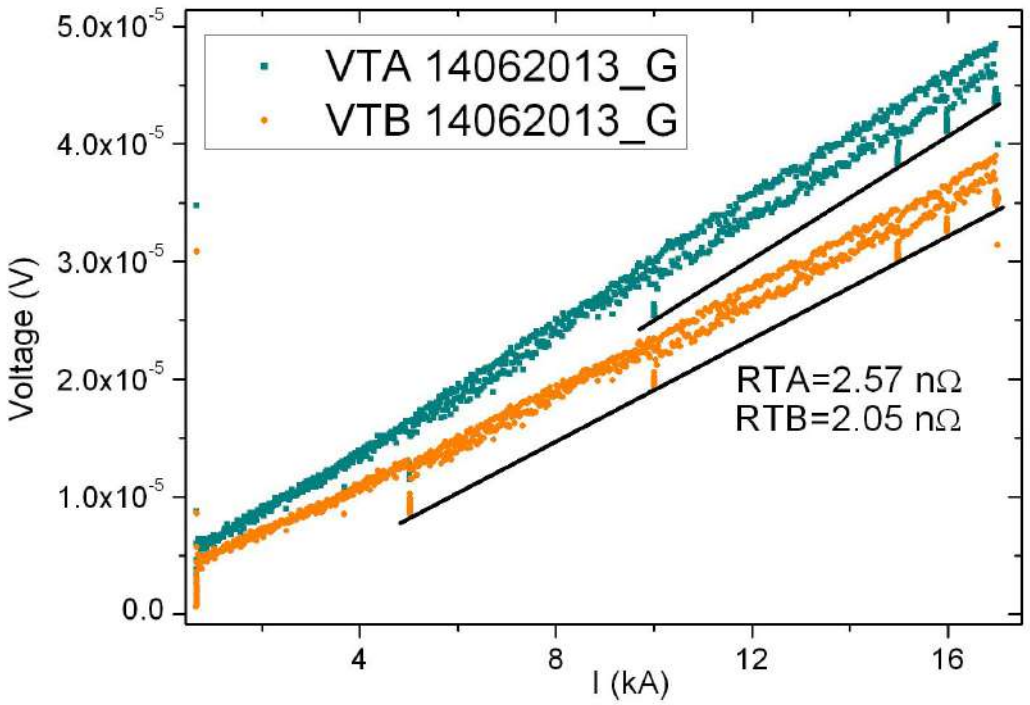

Figure 15: Measured voltages VTA and VTB across JT60SA joint versus current during run 14062013_G. The terminations resistances values are obtained by the slope of the lines that connect the points of minimum voltage for each current plateaux.

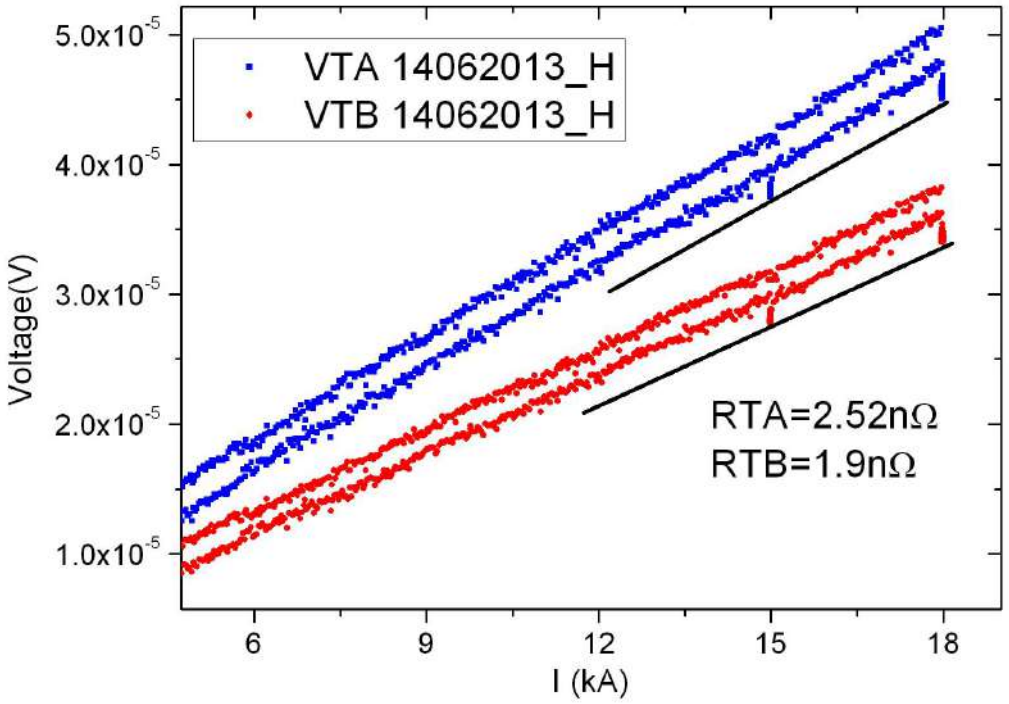

Figure 16: Measured voltages VTA and VTB across JT60SA joint versus current during run 14062013_H. The terminations resistances values are obtained by the slope of the lines that connect the points of minimum voltage for each current plateaux.

Conclusions

The measurement and the post-processing applied to the data give the result that the JT60SA joint resistance is 2.25±0.15nΩ.

ENEA ID	TR-JT60 TF-03		ENEA Classification	

Report of leak rate tests of ASG JT-60SA electrical breaker in ENEA Superconductivity lab

Project Details	JT-60SA Advanced Superconducting Tokamak BA-Satellite Tokamak Program / FUSION FOR ENERGY *This document is issued for the execution of the Agreement of Collaboration (AoC) between Fusion for Energy (F4E) and ENEA for the supply of 9 TF coils of JT-60SA*	
	JT-60SA DMS	BA_D_23QLZL
Authors & Contributors	R. Freda, L. Affinito	
Distribution List	Internal ENEA	**1.** UTFUS
	External	ASG-Superconductors, F4E, JAEA
Abstract	The measurement of the integrity at cryogenic temperature of three electrical insulation breakers produced by ASG for the TF coils of the JT-60SA Tokamak has been carried out at the Superconductivity Laboratories of ENEA. During all tests carried out, the insulation breakers have shown leakage values below the acceptable leak rate.	

Rev.	Date	Issued by	Reviewed by	Approved by
0	08/07/2013	R. Freda	L. Affinito	A. della Corte

Historical list of document revisions

Rev.	Description	Date	Summary of modifications with motivations notes

1.0 Introduction

The integrity of the insulation breakers for the TF coils of the JT-60SA Tokamak has been tested at cryogenic temperature.

Scope of the present document is to illustrate the activities carried out to test the insulation breakers id n. #1, #5, #022.

2.0 Sample preparation

At one end of the insulation breaker a plug was attached by Tig-welding; the opposite side was welded to an OD 12 mm stainless steel pipe connected to a leak detector by a KF25 flange (see fig. 1 and 2).

The stainless steel tube was equipped with a KF T-piece to insert and to move the breaker inside a liquid Helium dewar (see fig. 3 e 4).

On the pipe, nearest to the upper side of the insulator, a PT100 thermometer was installed, except for breaker #1 (see fig. 5). The total length of the sample from the welded plug to the end of the resin was about 230 mm.

Fig. 1 – breaker plugged and welded to the pipe

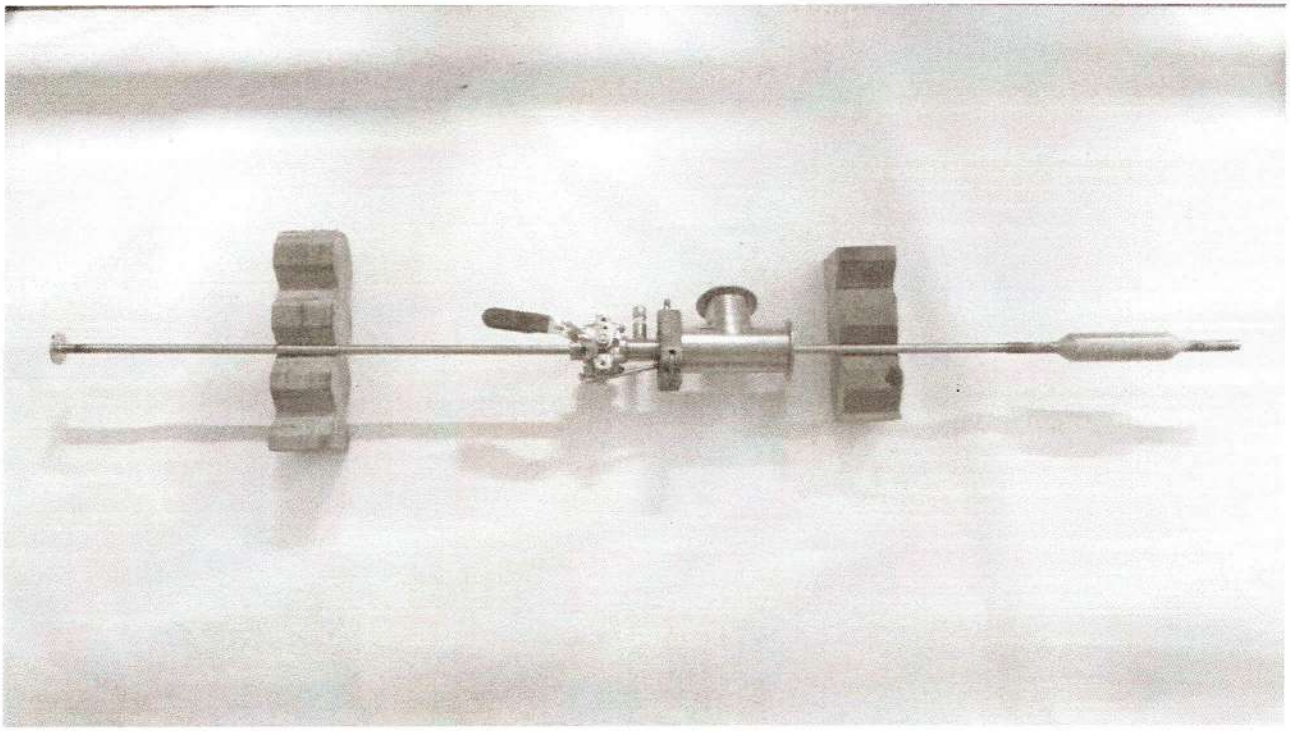

Fig. 2 – breaker assembly

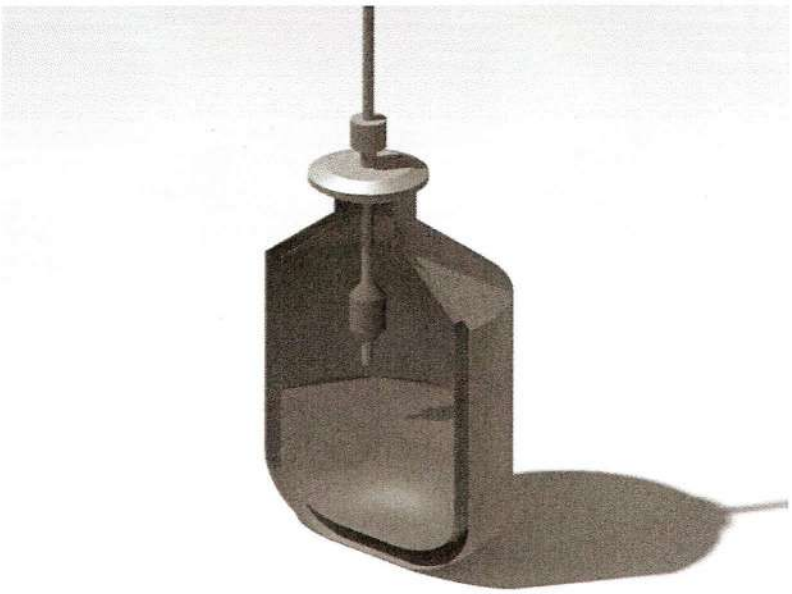

Fig. 3 – schematic breaker position inside the dewar

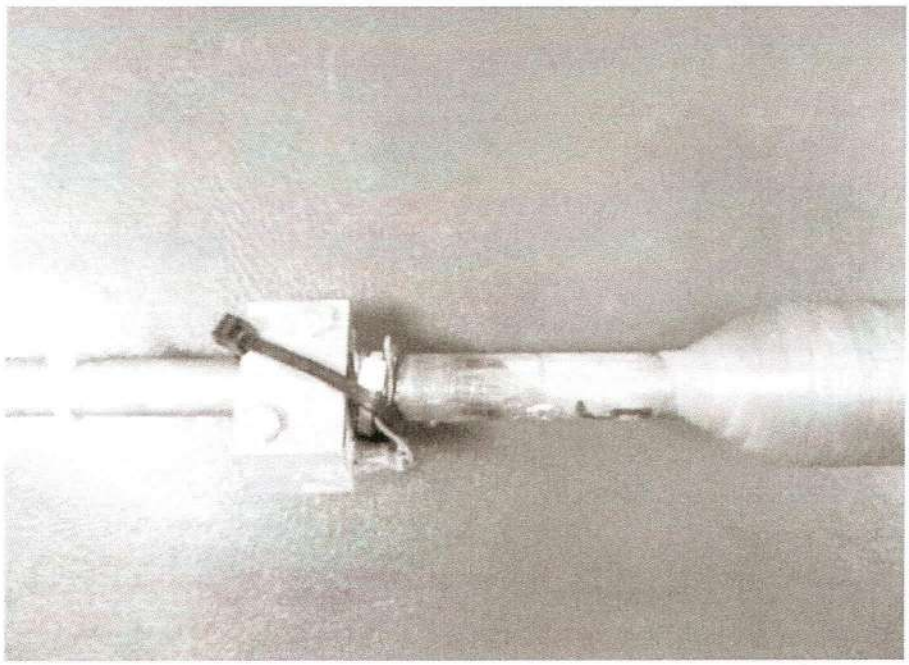

Fig. 4 – PT100 location

3.0 Instrumentation

Leak detector: VARIAN 979C

External calibrated leak (CL): ALCATEL N° FC07000096

Nominal value CL: 1.9E-08 mBar l/sec

Uncertainty measurement: ± 10%

CL calibration date: 26.01.2007 to 20°C

4.0 Measurement

For every insulation breaker, the following tests were performed:

1. preliminary test at room temperature with vacuum inside and Helium at atmospheric pressure outside. Leak integrity checked with a leak detector Varian 979C (see fig. 5).

2. cryogenic test with insulation breakers positioned above the liquid Helium level in a dewar with about 60 liters of liquid (see fig. 6). After temperature stabilization, breakers were dipped completely in liquid Helium for about 60 minutes. Thermal cycles were performed by repeating this operation three times. Leak rate was continuously monitored with the leak detector Varian 979C.

3. Final test at room temperature, as in point 1 above.

All the test results are reported in the following pages.

Maximum acceptable leak rate was: 1.0E-08 mbar l/sec (1.0E-09 Pa m^3/sec).

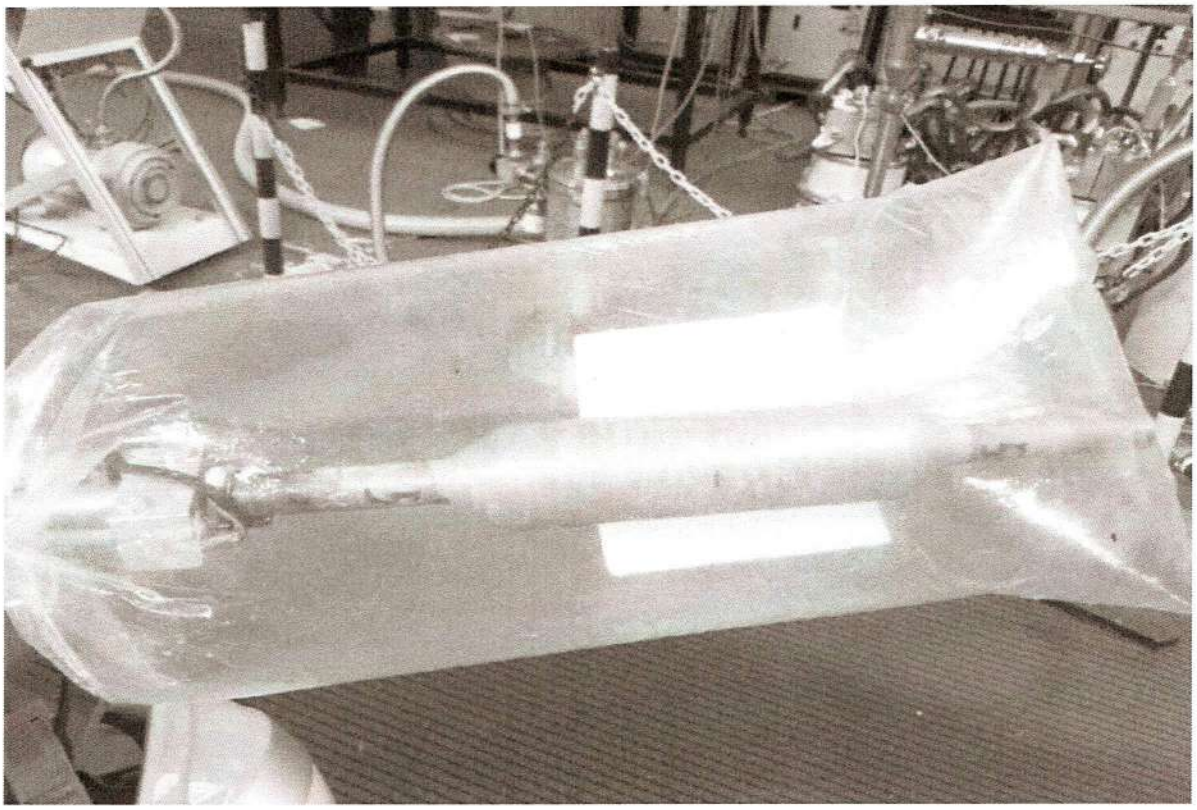

Fig. 5: room temperature test

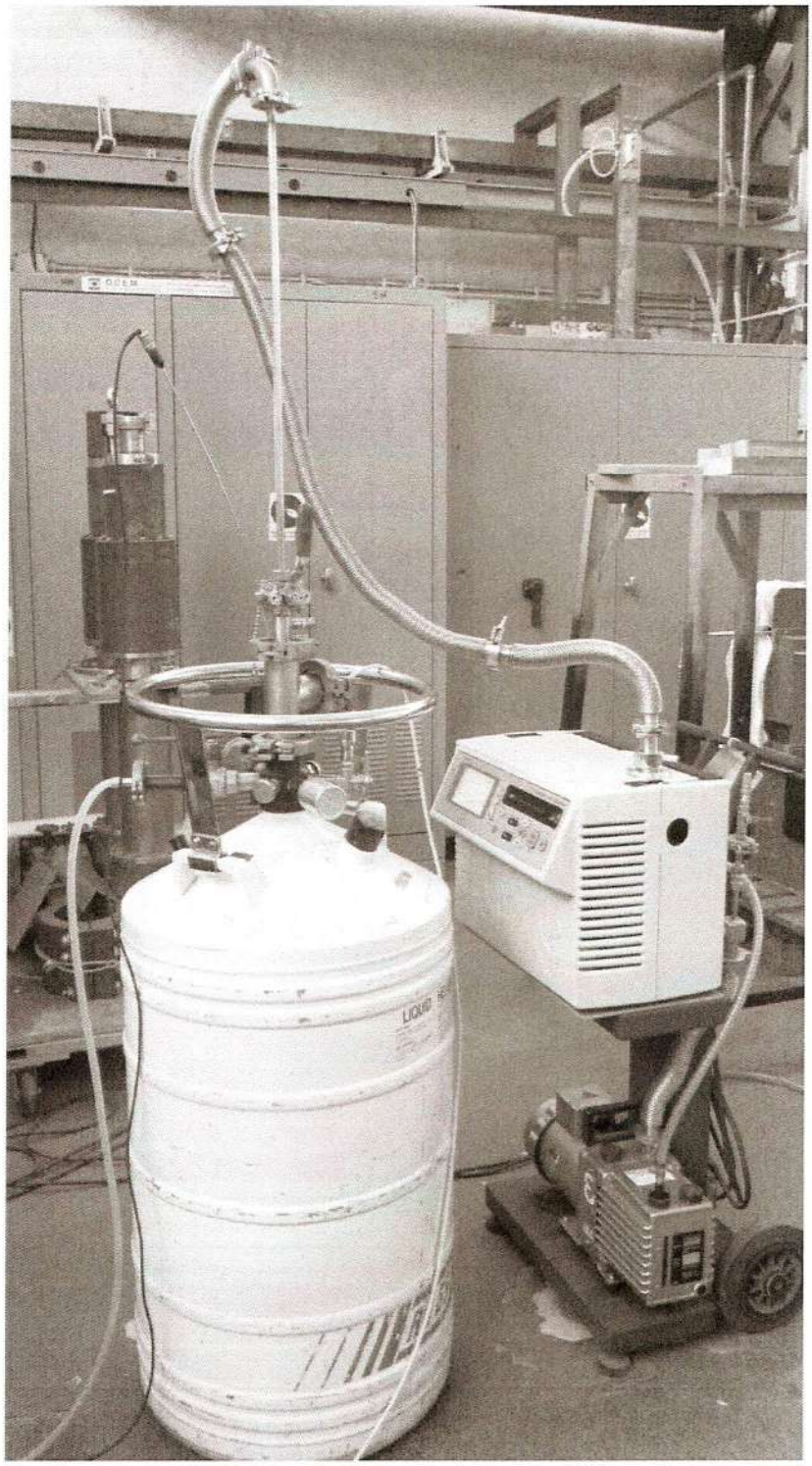

Fig. 6: test in liquid Helium

Breaker #1	CONDITIONS: ROOM TEMPERATURE	Liquid Helium level: 320 mm Minimum level for total breaker coverage: 230mm
Test Port (TP) 0.0E-04 mbar	PRELIMINARY TEST	FINAL TEST
Calibrated Leak (CL)	1.86E-08 mbar l/sec	
Background value without breaker	<1E-09 mbar l/sec	
Background value with breaker	<1E-09 mbar l/sec	<1E-09 mbar l/sec

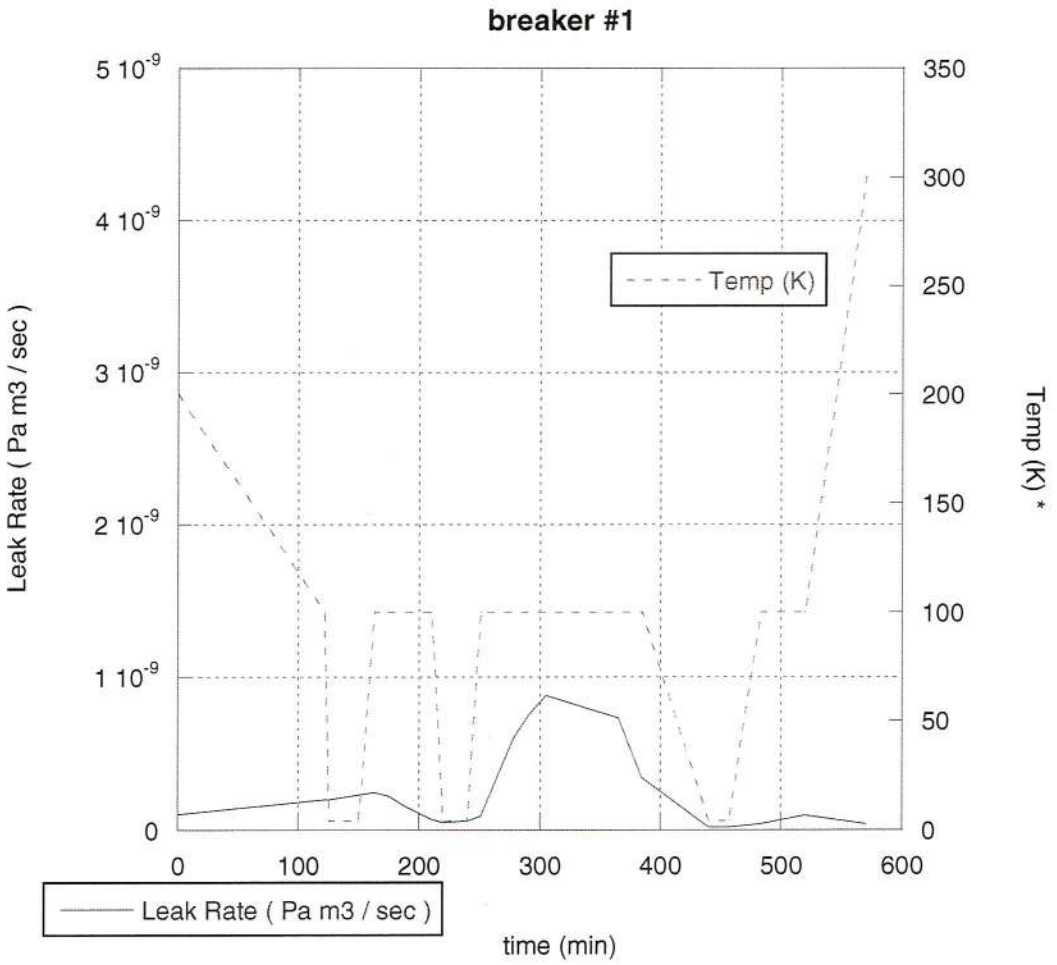

*Note : the temperature during this test was not measured, but a reference signal is reported, to indicate the breaker position in the dewar.

Breaker #5	CONDITIONS: ROOM TEMPERATURE	Liquid Helium level: 350 mm Minimum level for total breaker coverage: 230mm
TP 0.0E-04 mbar	PRELIMINARY TEST	FINAL TEST
CL	1.92E-08 mbar l/sec	
Background value without breaker	<1E-09 mbar l/sec	
Background value with breaker	<1E-09 mbar l/sec	<1E-09 mbar l/sec

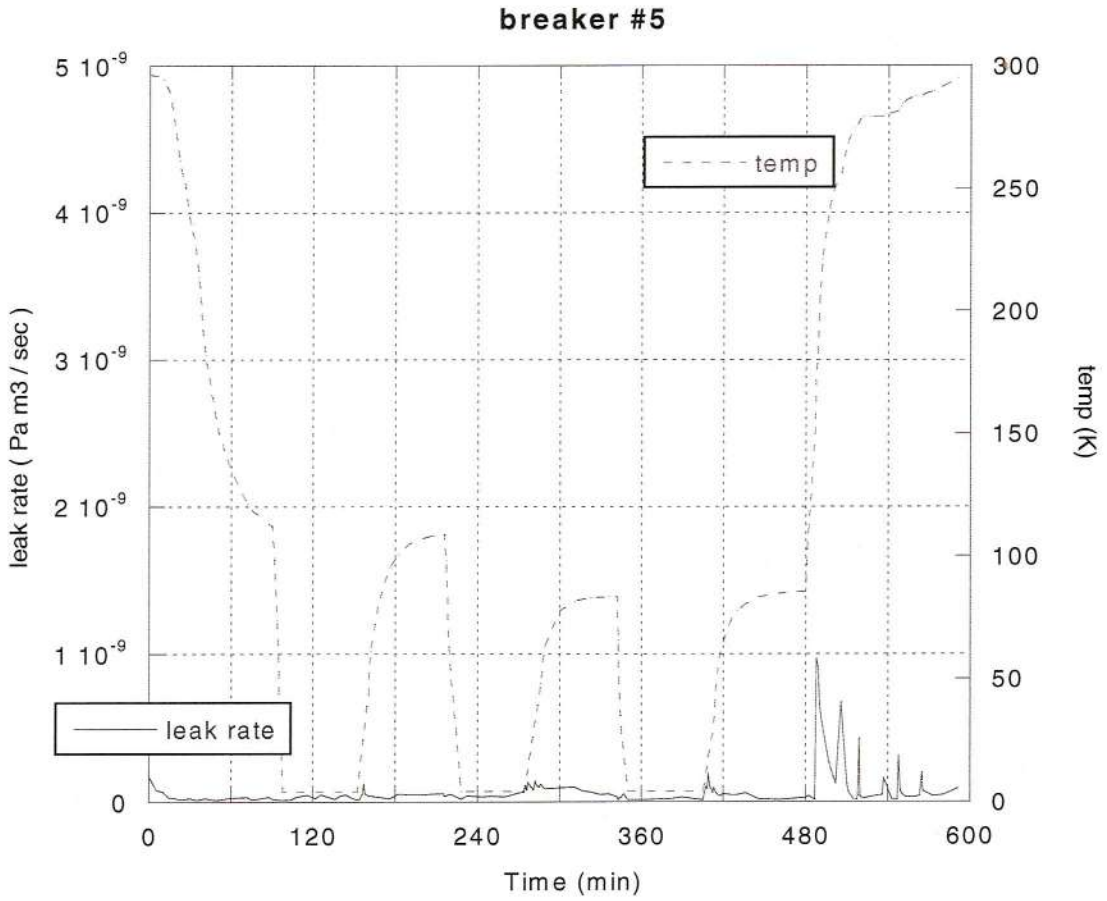

Breaker #022	CONDITIONS: ROOM TEMPERATURE	Liquid Helium level: 350 mm Minimum level for total breaker coverage: 230mm
TP 0.0E-04 mbar	PRELIMINARY TEST	FINAL TEST
CL	1.87E-08 mbar l/sec	
Background value without breaker	<1E-09 mbar l/sec	
Background value with breaker	<2E-09 mbar l/sec	<2E-09 mbar l/sec

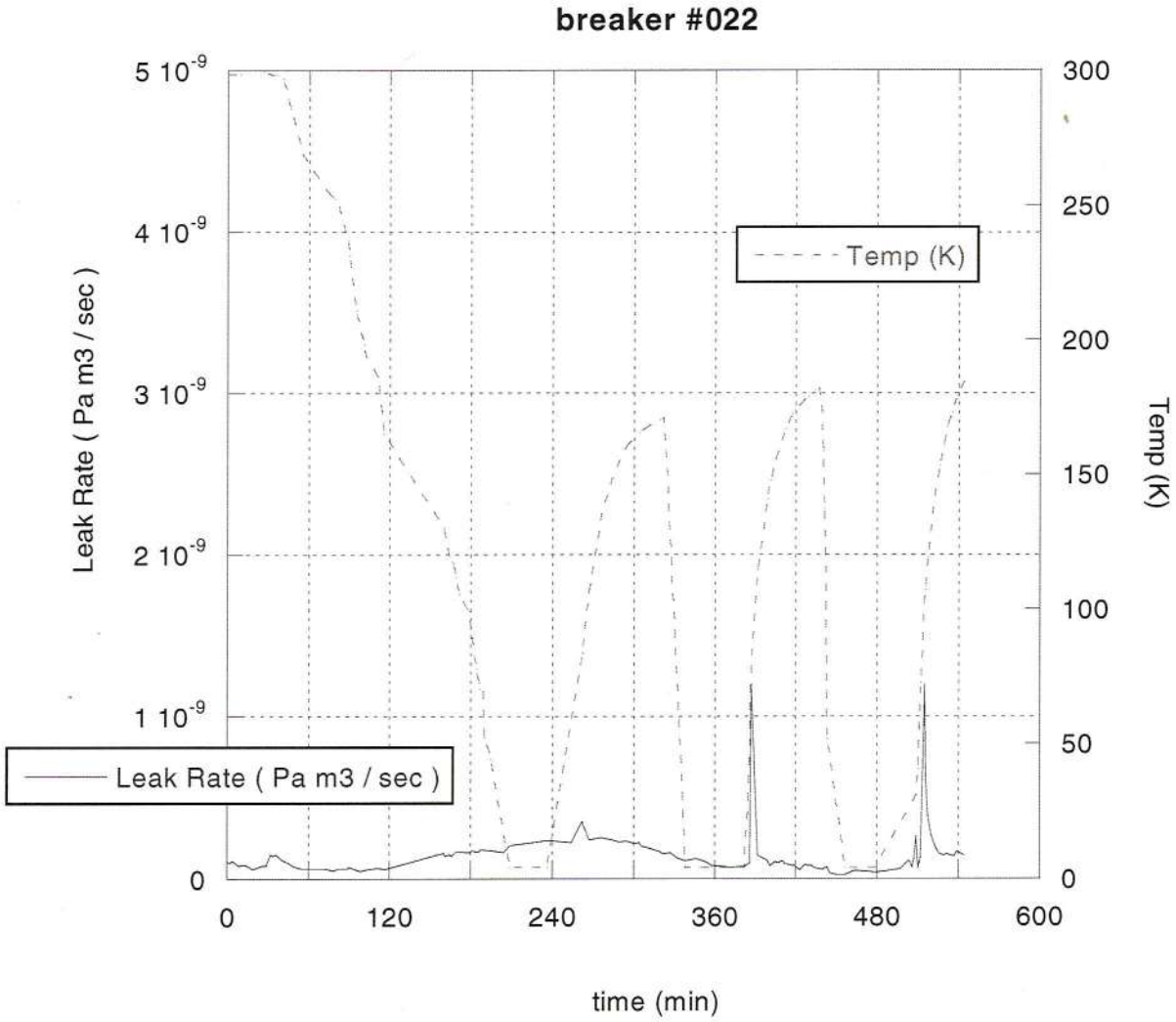

Conclusions

The tests carried out on all the insulation breakers have shown leakage values below the maximum acceptable leak rate, during all the performed tests.

The presence of some peaks during breakers lift from liquid Helium to warmer zones of the dewar are caused by a cryo-pumping effect of the breakers, with an effectiveness larger than that of the leak detector turbo pump.

ASG Superconductors

Titolo *title*	Identificativo ASG *ASG document no.*	Rev. *rev.*	Pag. *page*	Di *of*
Report of the JT-60SA casing mock-up welding	**700RM15049**	**0**	1	16
	Identificativo Contratto ENEA *ENEA Contractual ID no.* **RT-JT60TF-ASG-15049**			

Tipo doc. *doc. type*	Emittente *issued by*	Edizione in lingua *language*	Derivato da *derived from*	Rev. *rev.*
TR	PRS	ENG	NEW	

Commessa *job no.*	Progetto *project*	Cliente *client*
2053	JT-60SA	ENEA C.R. Frascati

Rev. *rev.*	Motivo Revisione *Reason for revision*

Rev *rev.*	St. *st.*	Sc. *sc.*	Preparato *prepared*	Controllato *checked*	Verificato *checked*	Verificato *checked*	Verificato *checked*	Approvato *approved*	Data *date*
0			A. Capurro	P. Pesenti	G. Drago	F. Terzi		P. Pesenti	17/09/13

ASG Superconductors s.p.a. si riserva tutti i diritti su questo documento che non può essere riprodotto neppure parzialmente senza la sua autorizzazione scritta
ASG Superconductors s.p.a. reserves all rights on this document that can not be reproduced in any part without its written consent

INDICE / *LIST OF CONTENTS*

1. INTRODUCTION 3
2. ASSEMBLY SEQUENCE 4
3. WELDING OF THE TRANSVERSE JOINT 6
4. DIMENSIONAL SURVEY 11
5. LONGITUDINAL WELD OF THE COVERS CASE 12

ANNEX:
Report MA132802

1. INTRODUCTION

In the frame of the JT-60SA Project two casing mock-ups have been provided by ENEA to ASG for case welding and coil embedding trials. This report describes the assembly and welding of the first JT-60SA casing mock-up, shown in Picture 1. The measurements performed for evaluating the mock-up welding distortions are also included.

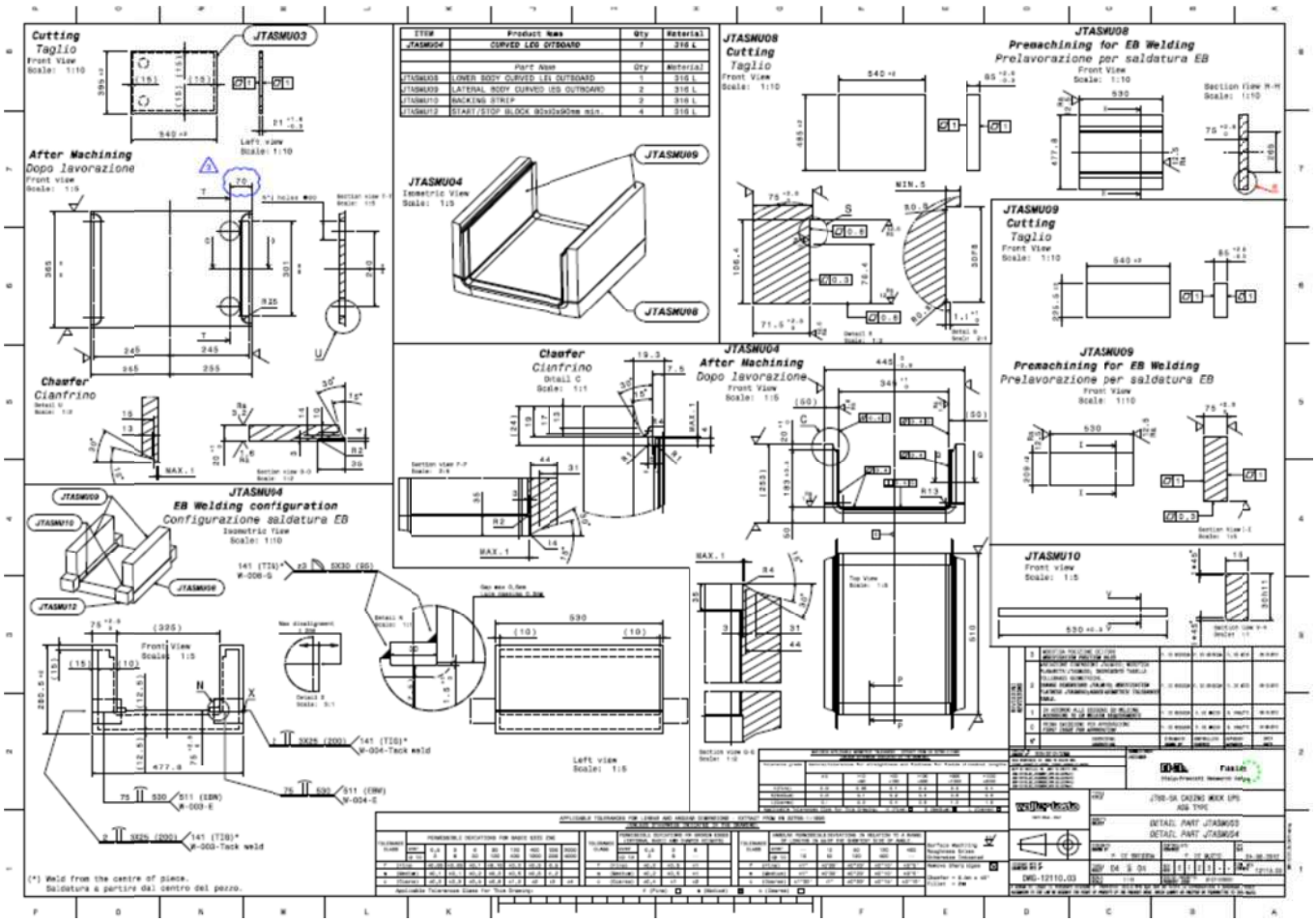

Picture 1

2. ASSEMBLY SEQUENCE

The first activity was the positioning of the two halves of the case mock-up in horizontal position and the insertion of the foreseen backing strip inside of them, as shown in Picture 2. The backing strip was performed by ASG, machining the slot on a plate as shown in picture 3 and then bending it.

Picture 2

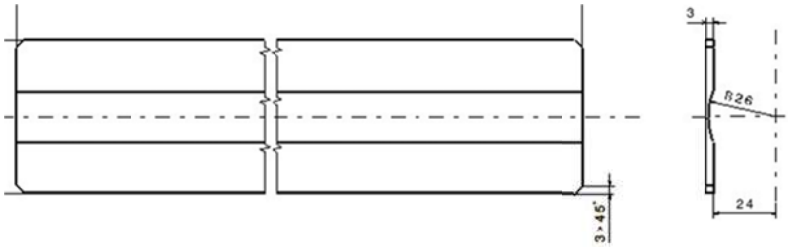

Picture 3

In order to get sufficient coupling precision it was decided to split the backing strip in 2 L-shaped halves, to fix them with clamps inside of the case slot, to assess that the gap between the strip and the case was close to 0 and to tack weld (GTAW tack weld, 10mm long, pitch 50mm) them on one half case.
Finally the two L strips were transversally GTAW welded in the mid of the case. Such assembly requires high precision due to the fact that the scope is to keep inert backing gas shielding all along the case transverse; excessive gap risks to generate shielding gas losses and consequent oxidation at the weld root.
A first set of thermocouples was placed in contact with the backing strip, whereas a second set was placed on the impregnated beam that simulated the coil (see Pictures 4, 5, 6).

Picture 4

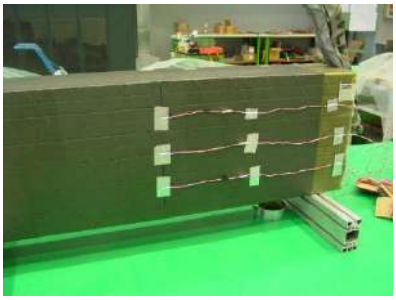

Picture 5

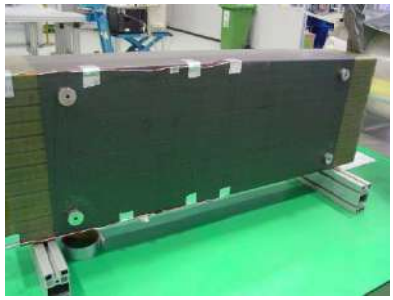

Picture 6

The beam was then wrapped with glass sheets and inserted into the half cases assembly.

Picture 7

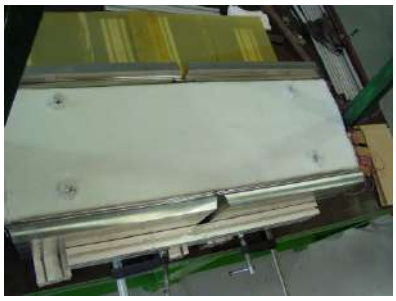

Picture 8

The first activity was the positioning of the two half cases mock-up on the clamping structure constituted by beams, brackets and locking bolts.

One of the test aim was to simulate the welding conditions foreseen on the Production Coil Cases. For this reason the samples have been positioned in vertical and clamped in an external rigid structure for simulating the constrains that the assembly tool will generate on the coil.

Picture 9

Picture 10

Picture 11

The case cover was not inserted at this stage (as foreseen in the production cycle); a provisional protection was placed on the impregnated beam. The case has been provided with several targets for the laser dimensional measurements as visible in Picture 9 and 10 and, after assembly completion and before starting of the welding activity, a reference mapping of the mock-up has been performed (Picture 11).

A check of the Magnetic permeability of the case mockup have been performed using an ASG a Foerster Magnetoscope Mod 1.069+permeability gauge mod 309 and the following values have been measured:

Measuring Point	Permeabilità/*Permeability* (μ) (min-max)	Val Rif/*Ref.Value*	Note
Upper half case (short sides)	1.20-1.35	not defined	
Upper half case (long side)	1.10-1.16	not defined	
Lower half case (short sides)	1.20-1.35	not defined	
Lower half case (long side)	1.15-1.21	not defined	

3. WELDING OF THE TRANSVERSE JOINT

In order to avoid risks of coil damage, to have run-in and run out plates for welding and to properly flow the weld backing, the two additional plates shown in Picture11 have been added at both ends of the transverse joint.
Proper working of the backing gas system has been assessed before starting the welding operation.

GTAW Tack welds (30mm long, 125A) at joint root have been performed according to the sequence in Picture 13 and as shown in Picture 14.

Picture 12

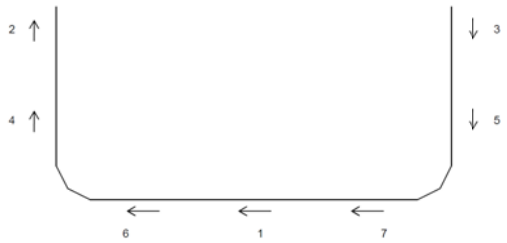

Picture 13

Picture 14

The Welding Procedure Specification ASG 15/13, in Picture 15, has been adopted for the transverse welding of the case. Simultaneous welding of the GTAW first pass was adopted on the 2 short sides of the case and along the case corners according to the sequence reported in Picture 16 and as shown in Picture 17.

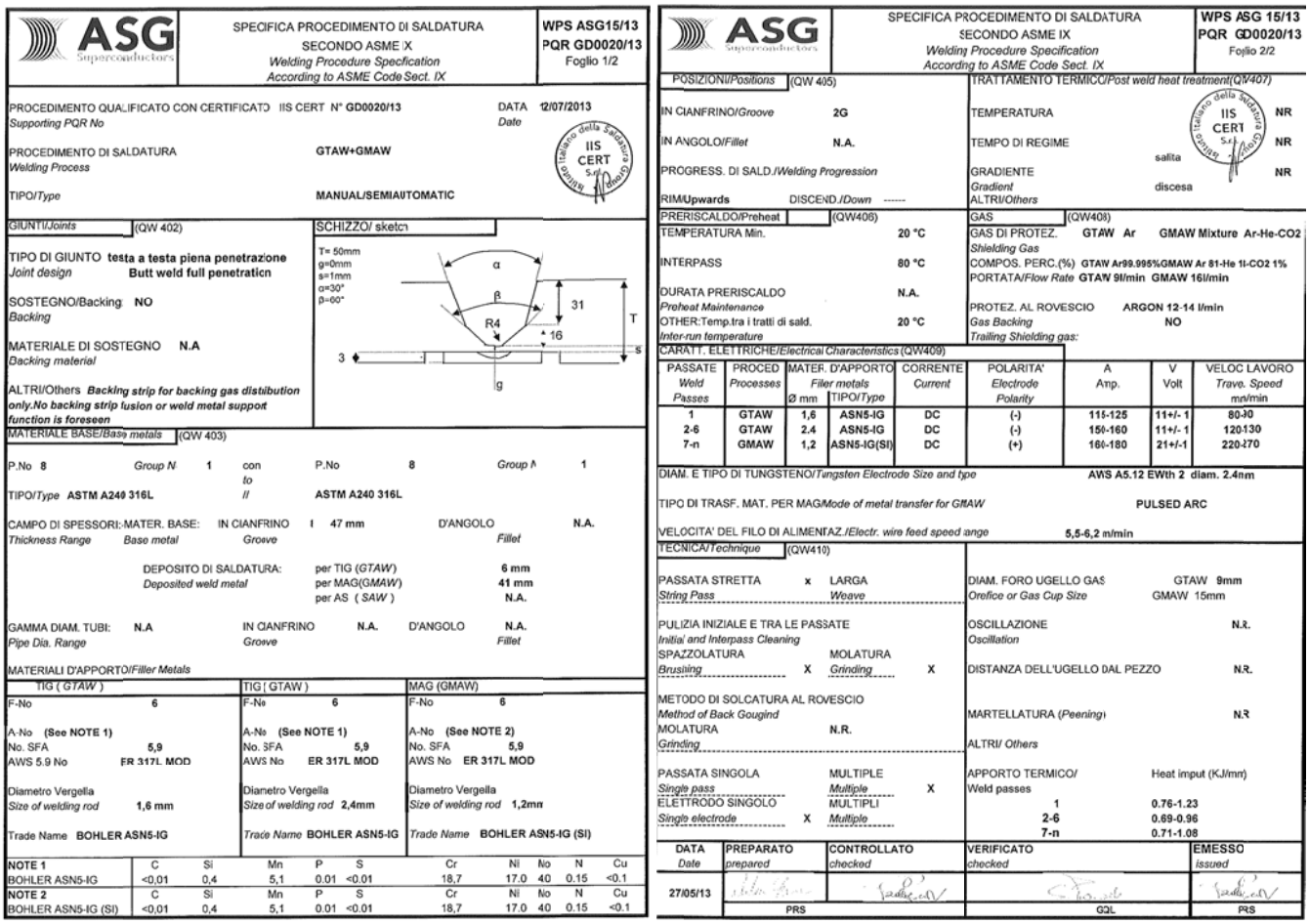

SPECIFICA PROCEDIMENTO DI SALDATURA SECONDO ASME IX *Welding Procedure Specification According to ASME Code Sect. IX* — WPS ASG15/13, PQR GD0020/13, Foglio 1/2

PROCEDIMENTO QUALIFICATO CON CERTIFICATO IIS CERT N° GD0020/13 — DATA 12/07/2013
Supporting PQR No — *Date*

PROCEDIMENTO DI SALDATURA *Welding Process*: GTAW+GMAW

TIPO/*Type*: MANUAL/SEMIAUTOMATIC

GIUNTI/*Joints* (QW 402)

TIPO DI GIUNTO *Joint design*: testa a testa piena penetrazione / Butt weld full penetration

SOSTEGNO/Backing *Backing*: NO

MATERIALE DI SOSTEGNO *Backing material*: N.A

ALTRI/Others: *Backing strip for backing gas distibution only.No backing strip fusion or weld metal support function is foreseen*

SCHIZZO/ sketch: T= 50mm, g=0mm, s=1mm, α=30°, β=60°, R4, 31, 16, T, s, 3, g

MATERIALE BASE/*Base metals* (QW 403)

P.No 8 *Group N* 1 con *to* P.No 8 *Group N* 1

TIPO/*Type* ASTM A240 316L // ASTM A240 316L

CAMPO DI SPESSORI: *Thickness Range* — MATER. BASE: *Base metal* — IN CIANFRINO *Groove* 47 mm — D'ANGOLO *Fillet* N.A.

DEPOSITO DI SALDATURA: *Deposited weld metal* — per TIG (*GTAW*) 6 mm; per MAG(*GMAW*) 41 mm; per AS (*SAW*) N.A.

GAMMA DIAM. TUBI: *Pipe Dia. Range* N.A — IN CIANFRINO *Groove* N.A. — D'ANGOLO *Fillet* N.A.

MATERIALI D'APPORTO/*Filler Metals*

TIG (*GTAW*)	TIG (GTAW)	MAG (GMAW)
F-No 6	F-No 6	F-No 6
A-No (See NOTE 1)	A-No (See NOTE 1)	A-No (See NOTE 2)
No. SFA 5,9	No. SFA 5,9	No. SFA 5,9
AWS 5.9 No ER 317L MOD	AWS No ER 317L MOD	AWS No ER 317L MOD
Diametro Vergella *Size of welding rod* 1,6 mm	Diametro Vergella *Size of welding rod* 2,4mm	Diametro Vergella *Size of welding rod* 1,2mm
Trade Name BOHLER ASN5-IG	*Trade Name* BOHLER ASN5-IG	*Trade Name* BOHLER ASN5-IG (SI)

	C	Si	Mn	P	S	Cr	Ni	Mo	N	Cu
NOTE 1 BOHLER ASN5-IG	<0,01	0,4	5,1	0.01	<0.01	18,7	17.0	40	0.15	<0.1
NOTE 2 BOHLER ASN5-IG (SI)	<0,01	0,4	5,1	0.01	<0.01	18,7	17.0	40	0.15	<0.1

SPECIFICA PROCEDIMENTO DI SALDATURA SECONDO ASME IX *Welding Procedure Specification According to ASME Code Sect. IX* — WPS ASG 15/13, PQR GD0020/13, Foglio 2/2

POSIZIONI/*Positions* (QW 405)

IN CIANFRINO/*Groove* 2G

IN ANGOLO/*Fillet* N.A.

PROGRESS. DI SALD./*Welding Progression*

RIM/Upwards DISCENDI./*Down* ------

TRATTAMENTO TERMICO/*Post weld heat treatment*(QW407)

TEMPERATURA NR

TEMPO DI REGIME NR

GRADIENTE *Gradient* salita / discesa NR

ALTRI/*Others*

PRERISCALDO/Preheat (QW406)

TEMPERATURA Min. 20 °C

INTERPASS 80 °C

DURATA PRERISCALDO *Preheat Maintenance* N.A.

OTHER:Temp.tra i tratti di sald. *Inter-run temperature* 20 °C

GAS (QW408)

GAS DI PROTEZ. *Shielding Gas* GTAW Ar GMAW Mixture Ar-He-CO2

COMPOS. PERC.(%) GTAW Ar99.995%GMAW Ar 81-He 18-CO2 1%

PORTATA/*Flow Rate* GTAW 9l/min GMAW 16l/min

PROTEZ. AL ROVESCIO *Gas Backing* ARGON 12-14 l/min

Trailing Shielding gas: NO

CARATT. ELETTRICHE/*Electrical Characteristics* (QW409)

PASSATE *Weld Passes*	PROCED *Processes*	MATER. D'APPORTO *Filler metals* Ø mm	TIPO/*Type*	CORRENTE *Current*	POLARITA' *Electrode Polarity*	A Amp.	V Volt	VELOC LAVORO *Travel Speed* mm/min
1	GTAW	1,6	ASN5-IG	DC	(-)	115-125	11+/- 1	80-90
2-6	GTAW	2.4	ASN5-IG	DC	(-)	150-160	11+/- 1	120-130
7-n	GMAW	1,2	ASN5-IG(SI)	DC	(+)	160-180	21+/-1	220-270

DIAM. E TIPO DI TUNGSTENO/*Tungsten Electrode Size and type* AWS A5.12 EWth 2 diam. 2.4mm

TIPO DI TRASF. MAT. PER MAG/*Mode of metal transfer for GMAW* PULSED ARC

VELOCITA' DEL FILO DI ALIMENTAZ./*Electr. wire feed speed range* 5,5-6,2 m/min

TECNICA/*Technique* (QW410)

PASSATA STRETTA *String Pass* x — LARGA *Weave*

PULIZIA INIZIALE E TRA LE PASSATE *Initial and Interpass Cleaning*

SPAZZOLATURA *Brushing* X — MOLATURA *Grinding* X

METODO DI SOLCATURA AL ROVESCIO *Method of Back Gougind*

MOLATURA *Grinding* N.R.

PASSATA SINGOLA *Single pass* — MULTIPLE *Multiple* X

ELETTRODO SINGOLO *Single electrode* X — MULTIPLI *Multiple*

DIAM. FORO UGELLO GAS *Orefice or Gas Cup Size* GTAW 9mm GMAW 15mm

OSCILLAZIONE *Oscillation* N.R.

DISTANZA DELL'UGELLO DAL PEZZO N.R.

MARTELLATURA (*Peening*) N.R

ALTRI/ *Others*

APPORTO TERMICO/ Weld passes — Heat imput (KJ/mm)

1 0.76-1.23

2-6 0.69-0.96

7-n 0.71-1.08

DATA *Date*	PREPARATO *prepared*	CONTROLLATO *checked*	VERIFICATO *checked*	EMESSO *issued*
27/05/13	PRS		GQL	PRS

Picture 15

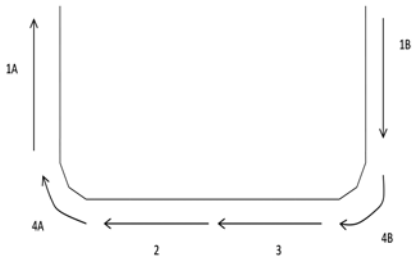

Picture 16

Picture 17

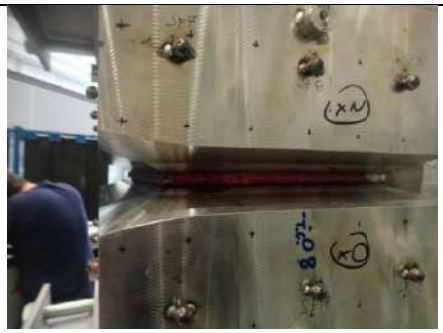

Picture 18

After the completion of the first GTAW pass, visual and dye penetrant test (Picture 18) have been performed without evidencing any relevant indications.

A total of 3 GTAW layers (6 GTAW welding passes) were finally performed adopting the same sequence shown in Picture 16. A second dye penetrant test on the last GTAW weld layer has been performed without evidencing any relevant indications.

After completion of GTAW layers a sequence for completing the transverse weld in correspondence of the cross with the longitudinal champers was tested. In this area the root of the chamfer is missing as shown in Picture 19. In order to fill this area a ceramic support was placed inside of the groove and

Picture 19

Picture 20

Picture 21

short, overlapped GTAW passes have been performed (Picture 20) up to the closure of the gap (Picture 21). Due to the complexity of this operation, ASG proposes to avoid it by introducing a thin shaped sheet inside of the groove, joining completely its perimeter to the case before depositing filling passes on it; this option was submitted to ENEA-F4E and is under evaluation. After completion of these welds layers at both extremities of the mock-up, grinding and cleaning of these areas have been performed. At the end of the layer deposit a run in-plate was placed, for the subsequent GMAW welding passes.

The GMAW filling passes have been performed in 3 different steps each, again starting from the simultaneous welding of the mock-up short sides. A final step was then performed on the long side. The adopted sequence is shown in Picture 22. All weld stop and starting point were grinded for removing potential welding defects. The stop and start position was properly scaled among the welding passes that form a weld layer, for simplifying the grinding of end of the weld step.

Picture 22

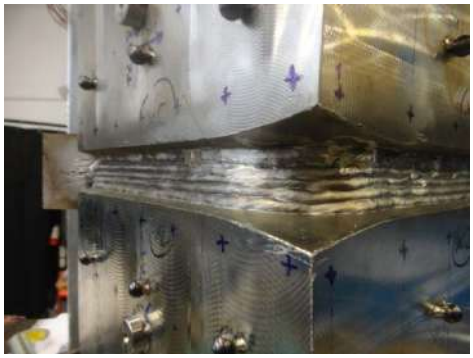

Picture 23

After 11 welding layers, the transverse chamfer was filled with the exception of the two corners. It was decided to introduce new run-in and run-out plates fixed on the chamfer, as shown in Picture 24, for continuing the GMAW filling passes. When the corners were almost filled , the run-in and run-out plates have been removed and the corner completed by GTAW. At the end the corner surfaces were flushed, with the final result shown in Picture 25. A final dye penetrant test did not evidence any relevant indications all along the complete transverse weld.

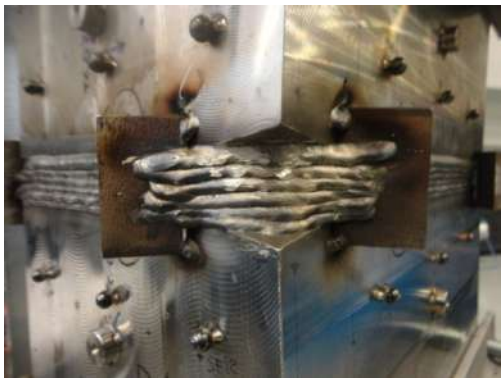

Picture 24

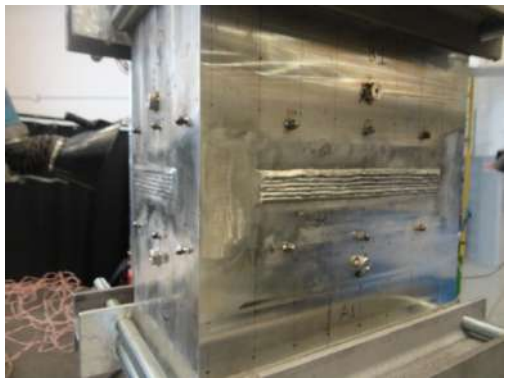

Picture 25

The transverse weld thermal impact on the coil was fully recorded by means of 8 thermocouples placed as shown in Picture 26.
Picture 27 and 28 show the temperature graphs recorded during the welding activity; maximum temperature of 130°C was detected behind the backing strip while the impregnation beam reached a maximum temperature of about 80°C.

At the end of the welding activities (including the longitudinal welds described in the next chapter) the impregnation beam was extracted to be used for an embedding test. No damage, burning or colouring of the glass sheets wrapped around the impregnation beam was detected, as additional confirmation that critical temperatures were not reached during welding

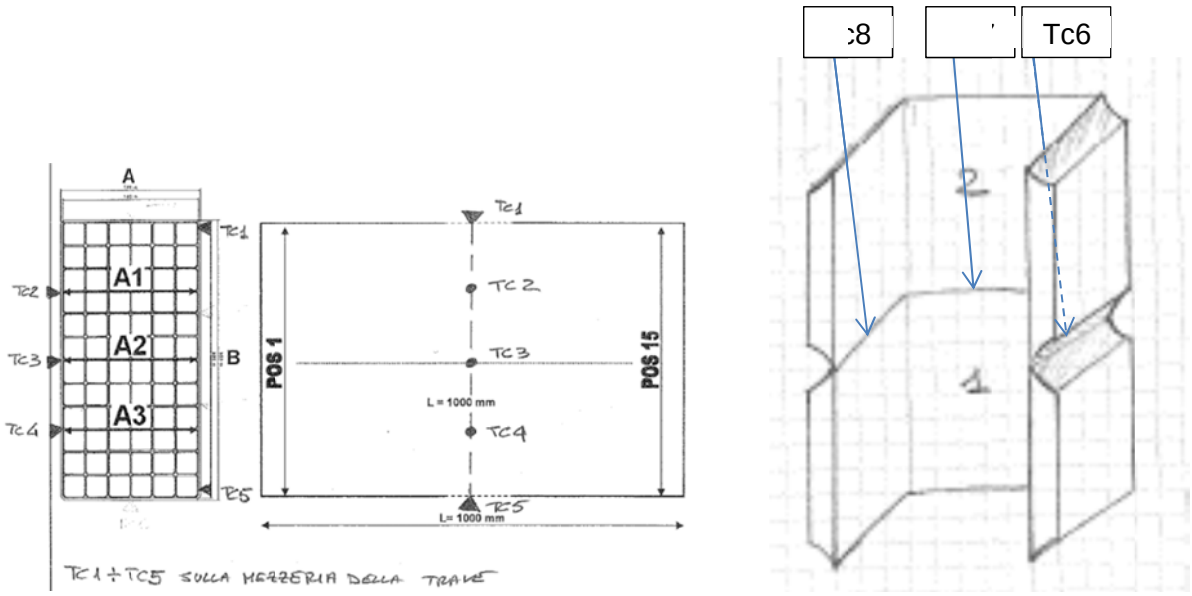

Picture 26

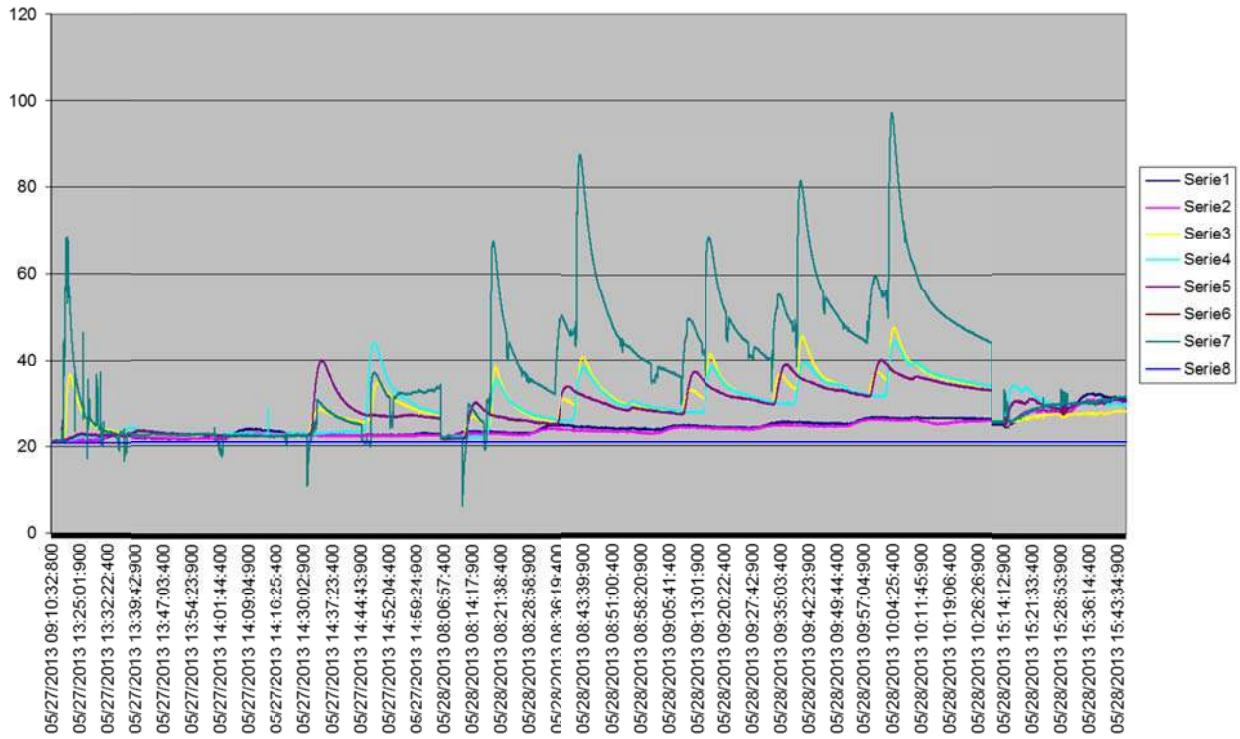

Picture 27

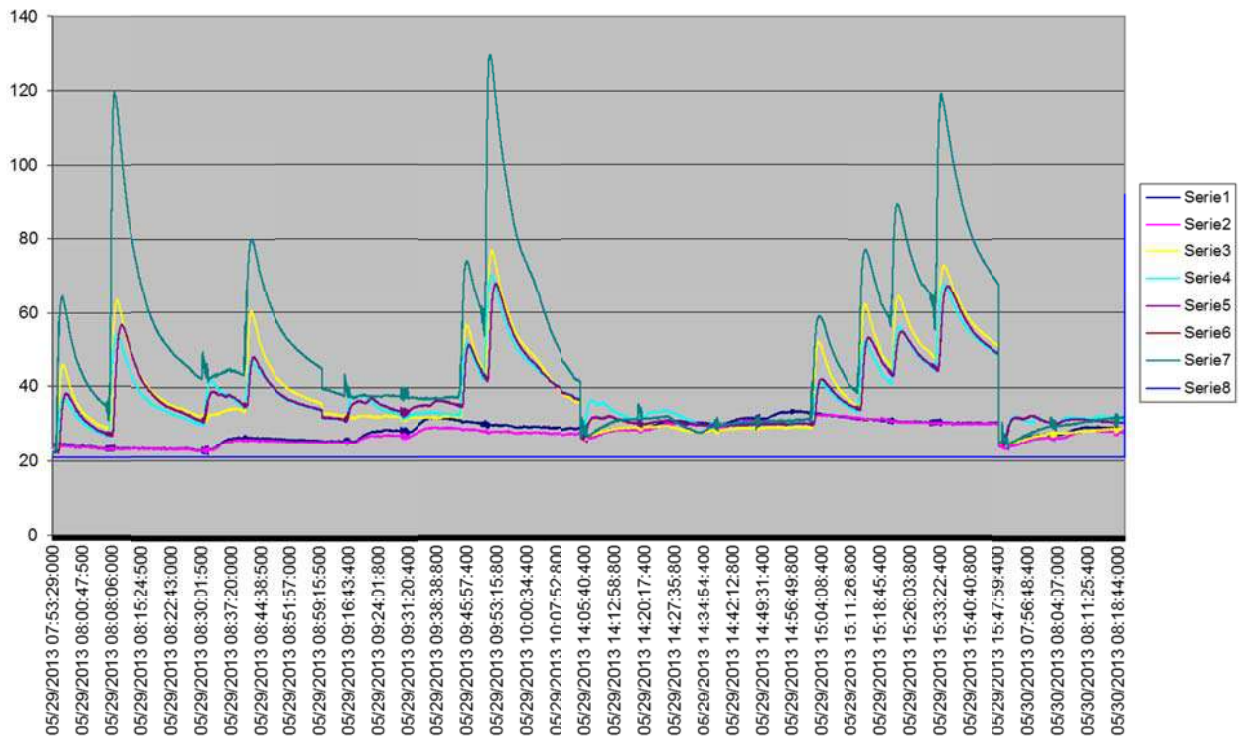

Picture 28

4. DIMENSIONAL SURVEY

It was foreseen to perform a geometrical survey, in different stages, of the transverse and longitudinal welds completion. The following steps were envisaged:

During transverse weld:
Dimensional survey after assembly, before transverse welding
Dimensional survey after GTAW root pass
Dimensional survey after third GTAW layer (6 GTAW passes, 6mm thk.)
Dimensional survey after second GMAW layer (6+15mm thk.)
Dimensional survey after fifth GMAW layer (6+30mm thk.)
Dimensional survey at the welding completion (6+41mm thk.)

During longitudinal welds:
Dimensional survey after assembly and tack welding of the covers
Dimensional survey after GTAW root pass
Dimensional survey after second GTAW layer
Dimensional survey after second GMAW layer (mid of GMAW layer deposited)
Dimensional survey at the longitudinal welds completion

The complete set of the performed laser measurements is in the Annexed Report MA132802.
Additionally, Picture 29 summarizes the variations detected by a caliper on the distance among some reference spheres that were fixed on the mock-up during the transverse joint welding

			VERTICALE									ORIZZ. ALTO			ORIZZ. BASSO		
			S1-S10	S2-S11	S3-S12	S4-S13	S5-S14	S6-S15	S7-S16	S8-S17	S9-S18	S1-S3	S4-S6	S7-S9	S10-S12	S13-S15	S16-S18
27/05/2013	Rif. 1	Valori iniziali (prima della sald.)	148.41	147.75	147.87	149.21	149.86	147.50	151.38	151.82	147.86	185.80	244.80	176.27	184.93	244.52	179.27
27/05/2013	Rif. 2	Valori dopo 1a passata TIG	147.82	147.20	147.30	148.58	149.19	146.79	150.74	151.19	147.32	186.16	244.75	176.29	185.27	244.79	179.30
	Rif.1-Rif. 2	Ritiro dopo 1a TIG	0.59	0.55	0.57	0.63	0.67	0.71	0.64	0.63	0.54	-0.36	0.05	-0.02	-0.34	-0.27	-0.03
28/05/2013	Rif. 3	Valori dopo3 strati , 6passate, TIG (6mm)	145.95	145.19	145.19	146.31	146.85	144.36	148.31	148.96	145.23	185.71	244.85	176.31	184.83	244.80	179.22
	Rif.2-Rif. 3		1.87	2.01	2.11	2.27	2.34	2.43	2.43	2.23	2.09	0.45	-0.10	-0.02	0.44	-0.01	0.08
	Rif.1-Rif. 3	Ritiro dopo TIG	2.46	2.56	2.68	2.90	3.01	3.14	3.07	2.86	2.63	0.09	-0.05	-0.04	0.10	-0.28	0.05
29/05/2013	Rif.4	Valori dopo 2° strato MIG (p11),6+15 mm dep	144.68	143.72	143.50	144.58	145.23	142.91	147.08	147.81	144.15	185.78	245.04	176.33	184.95	244.61	179.35
	Rif 3-Rif 4		1.27	1.47	1.69	1.73	1.62	1.45	1.23	1.15	1.08	-0.07	-0.19	-0.02	-0.12	0.19	-0.13
	Rif 1-Rif 4		3.73	4.03	4.37	4.63	4.63	4.59	4.30	4.01	3.71	0.02	-0.24	-0.06	-0.02	-0.09	-0.08
30/05/2013	Rif.5	Valori dopo 5° strato MIG (p21),6+ 30mm dep.	144.19	142.89	142.44	143.38	143.97	141.62	145.93	146.90	143.54	185.61	244.79	176.25	184.68	244.69	179.35
	Rif 4-Rif 5		0.49	0.83	1.06	1.20	1.26	1.29	1.15	0.91	0.61	0.17	0.25	0.08	0.27	-0.08	0.00
	Rif 1-Rif 5		4.22	4.86	5.43	5.83	5.89	5.88	5.45	4.92	4.32	0.19	0.01	0.02	0.25	-0.17	-0.08
03/06/2013	Rif.6	Valori finali	144.26	142.79	142.27	143.17	143.72	141.37	145.66	146.70	143.46	185.70	244.73	176.18	184.58	244.67	178.95
	Rif 5-Rif 6		-0.07	0.10	0.17	0.21	0.25	0.25	0.27	0.20	0.08	-0.09	0.06	0.07	0.10	0.02	0.40
	Rif 1-Rif 6		4.15	4.96	5.60	6.04	6.14	6.13	5.72	5.12	4.40	0.10	0.07	0.09	0.35	-0.15	0.32

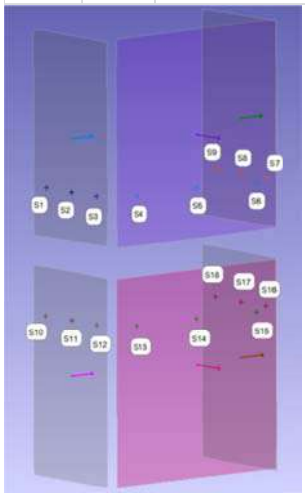

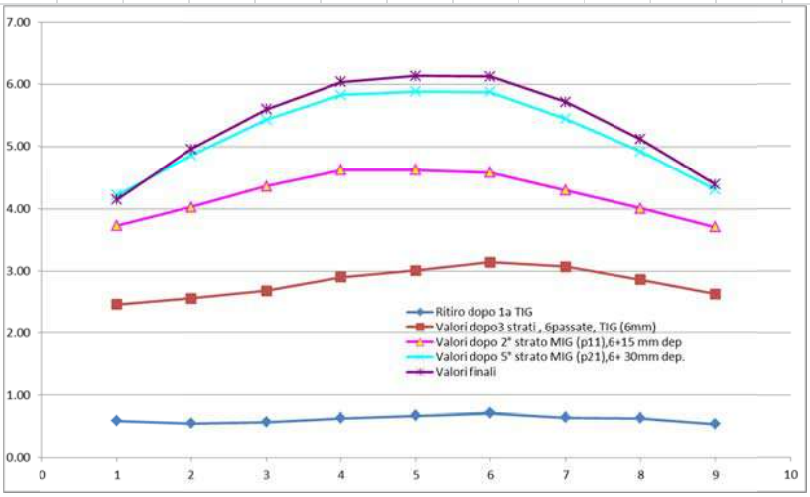

Picture 29

Following the analysis of these measurements, a total 5 mm extra-length on each transversal joint of the case is deemed as the minimum value to avoid the interference between case and coil, due to the welding shrinkage.

5. LONGITUDINAL WELD OF THE COVERS CASE

After completion of the transverse joint, the mock-up has been 90° rotated and placed with the longitudinal chamfer in frontal position. The provided mock-up cover was divided in two identical parts.
Assembling these covers, the joint between them will result exactly in correspondence of the transverse joint, generating a cross between 3

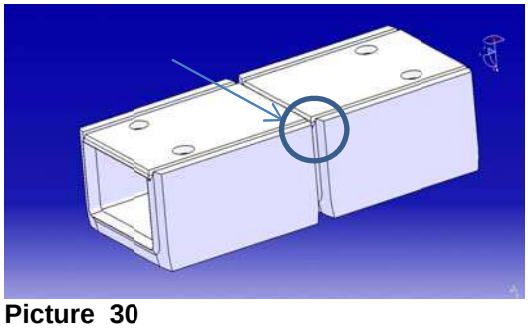

Picture 30

different welds (transverse weld, longitudinal of the covers, vertical weld between the covers) as shown in Picture 30.

For the production cases it has already been decided to shift the joint between the covers in order to avoid this triple cross. In order to simulate this geometry one of the half cover was reduced in length and the vertical joint between covers consequently moved about 100mm in respect of the transverse one.
This modification caused the impossibility to put backing gas in the plate behind the covers joint.
For this reason a breakage of the wall of the slot present at the back of covers was performed both sides (see Pictures 31 and 32) and the backing strip spot welded to one cover. In this way the channel was connected to the longitudinal channels present on the case allowing backing gas protection of all welds

Picture 31

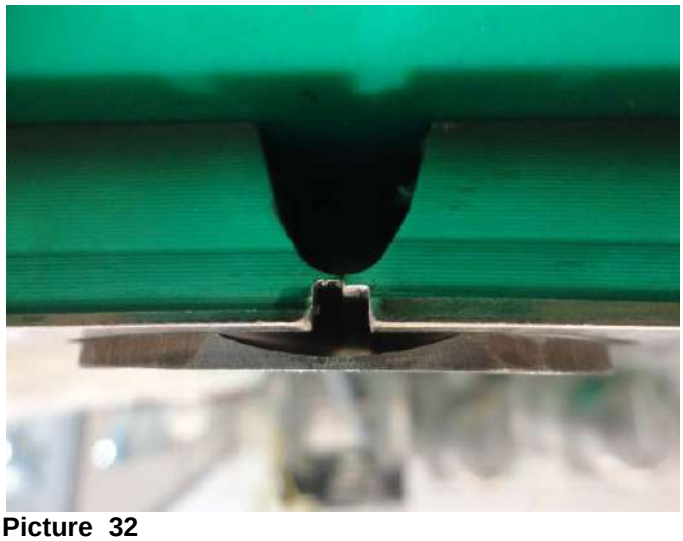

Picture 32

The covers were preliminary tack welded to the case by keeping pressure on them with the same stiffening tool used for the transverse weld (see picture 33). The tack welding sequence was as shown in Picture 34, performing 8 GTAW tack welds, 50mm long each, in the longitudinal champers and 2 tack welds,30mm each, in the vertical joint.

Picture 33

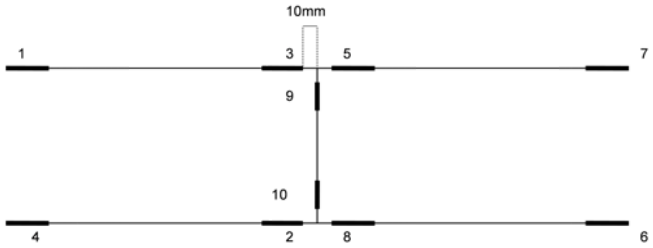

Picture 34

The longitudinal welds were performed according to the WPS ASG 17/13, whereas the vertical joint between the covers was performed according to the WPS ASG 74/13 as shown in Picture 35 and 36.

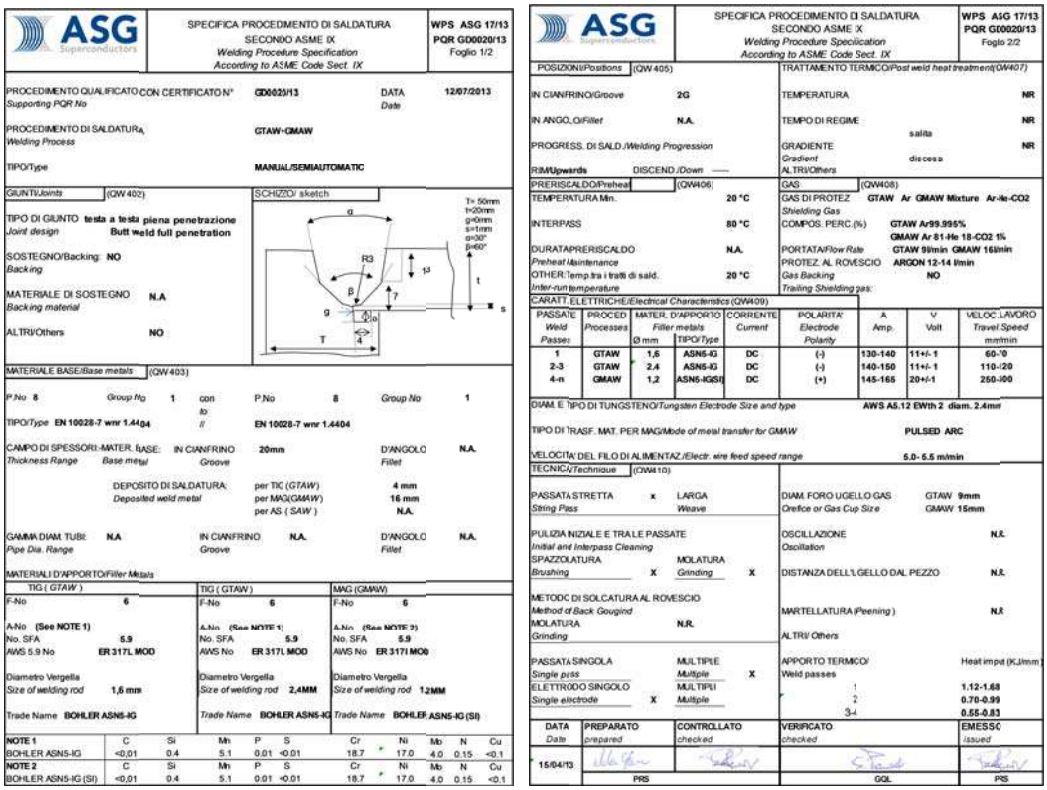

SPECIFICA PROCEDIMENTO DI SALDATURA SECONDO ASME IX — WPS ASG 17/13 PQR GD0020/13 Foglio 1/2

PROCEDIMENTO QUALIFICATO CON CERTIFICATO N° GD0020/13 — DATA 12/07/2013

PROCEDIMENTO DI SALDATURA: GTAW-GMAW

TIPO/Type: MANUAL/SEMIAUTOMATIC

GIUNTI/Joints (QW 402): TIPO DI GIUNTO testa a testa piena penetrazione / Butt weld full penetration; SOSTEGNO/Backing: NO; MATERIALE DI SOSTEGNO: N.A; ALTRI/Others: NO

MATERIALE BASE/Base metals (QW 403): P.No 8 Group No 1 con P.No 8 Group No 1; TIPO/Type EN 10028-7 wnr 1.4404 // EN 10028-7 wnr 1.4404

CAMPO DI SPESSORI-MATER. BASE: IN CIANFRINO 20mm; D'ANGOLO N.A.

DEPOSITO DI SALDATURA: per TIG (GTAW) 4 mm; per MAG (GMAW) 16 mm; per AS (SAW) N.A.

GAMMA DIAM. TUBI: N.A; IN CIANFRINO N.A.; D'ANGOLO N.A.

MATERIALI D'APPORTO/Filler Metals: TIG (GTAW) F-No 6, A-No (See NOTE 1), No. SFA 5.9, AWS 5.9 No ER 317L MOD, Diametro Vergella 1,6 mm, Trade Name BOHLER ASN5-IG; MAG (GMAW) F-No 6, A-No (See NOTE 2), No. SFA 5.9, AWS No ER 317L MOD, Diametro Vergella 1,2MM, Trade Name BOHLER ASN5-IG (SI)

	C	Si	Mn	P	S	Cr	Ni	Mo	N	Cu
NOTE 1 BOHLER ASN5-IG	<0,01	0.4	5.1	0.01	<0.01	18.7	17.0	4.0	0.15	<0.1
NOTE 2 BOHLER ASN5-IG (SI)	<0,01	0.4	5.1	0.01	<0.01	18.7	17.0	4.0	0.15	<0.1

SPECIFICA PROCEDIMENTO DI SALDATURA SECONDO ASME IX — WPS ASG 17/13 PQR GD0020/13 Foglio 2/2

POSIZIONI/Positions (QW 405): IN CIANFRINO/Groove 2G; IN ANGOLO/Fillet N.A.; PROGRESS. DI SALD./Welding Progression RIM/Upwards DISCEND./Down —

TRATTAMENTO TERMICO/Post weld heat treatment (QW407): TEMPERATURA NR; TEMPO DI REGIME NR; GRADIENTE NR; ALTRI/Others

PRERISCALDO/Preheat (QW406): TEMPERATURA Min. 20 °C; INTERPASS 80 °C; DURATA PRERISCALDO N.A.; OTHER: Temp. tra i tratti di sald. 20 °C

GAS (QW408): GAS DI PROTEZ. GTAW Ar GMAW Mixture Ar-He-CO2; COMPOS. PERC. (%) GTAW Ar99.995% GMAW Ar 81-He 18-CO2 1%; PORTATA/Flow Rate GTAW 9l/min GMAW 16l/min; PROTEZ. AL ROVESCIO ARGON 12-14 l/min; Gas Backing NO

CARATT. ELETTRICHE/Electrical Characteristics (QW409):

PASSATE Weld Passes	PROCED Processes	MATER. D'APPORTO Filler metals Ø mm	TIPO/Type	CORRENTE Current	POLARITA' Electrode Polarity	A Amp.	V Volt	VELOC. LAVORO Travel Speed mm/min
1	GTAW	1,6	ASN5-IG	DC	(-)	130-140	11+/-1	60-70
2-3	GTAW	2,4	ASN5-IG	DC	(-)	140-150	11+/-1	110-120
4-n	GMAW	1,2	ASN5-IG(SI)	DC	(+)	145-165	20+/-1	250-300

DIAM. E TIPO DI TUNGSTENO/Tungsten Electrode Size and type: AWS A5.12 EWth 2 diam. 2.4mm

TIPO DI TRASF. MAT. PER MAG/Mode of metal transfer for GMAW: PULSED ARC

VELOCITA' DEL FILO DI ALIMENTAZ./Electr. wire feed speed range: 5.0- 5.5 m/min

TECNICA/Technique (QW410): PASSATA STRETTA x / LARGA; DIAM. FORO UGELLO GAS GTAW 9mm GMAW 15mm; PULIZIA INIZIALE E TRA LE PASSATE; OSCILLAZIONE N.R.; SPAZZOLATURA X / MOLATURA X; DISTANZA DELL'UGELLO DAL PEZZO N.R.; METODO DI SOLCATURA AL ROVESCIO; MOLATURA N.R.; MARTELLATURA (Peening) N.R.; ALTRI/Others; PASSATA SINGOLA / MULTIPLE X; APPORTO TERMICO/Weld passes: 1 1.12-1.68, 2 0.70-0.99, 3-4 0.55-0.83; ELETTRODO SINGOLO / MULTIPLI X

DATA Date	PREPARATO prepared	CONTROLLATO checked	VERIFICATO checked	EMESSO issued
15/04/13	PRS		GGL	PRS

Picture 35

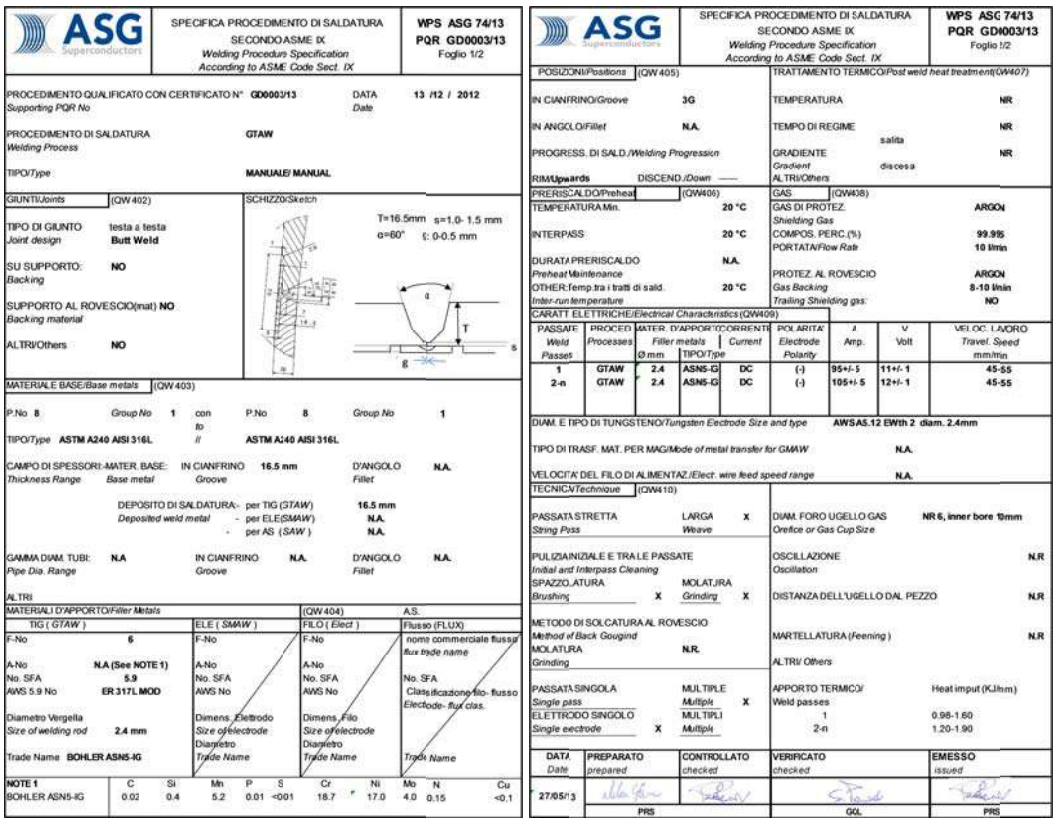

SPECIFICA PROCEDIMENTO DI SALDATURA SECONDO ASME IX — WPS ASG 74/13 PQR GD0003/13 Foglio 1/2

PROCEDIMENTO QUALIFICATO CON CERTIFICATO N° GD0003/13 — DATA 13 /12 / 2012

PROCEDIMENTO DI SALDATURA: GTAW

TIPO/Type: MANUAL/ MANUAL

GIUNTI/Joints (QW 402): TIPO DI GIUNTO testa a testa / Butt Weld; SU SUPPORTO: NO; SUPPORTO AL ROVESCIO (inat) NO; ALTRI/Others: NO

MATERIALE BASE/Base metals (QW 403): P.No 8 Group No 1 con P.No 8 Group No 1; TIPO/Type ASTM A240 AISI 316L // ASTM A240 AISI 316L

CAMPO DI SPESSORI-MATER. BASE: IN CIANFRINO 16.5 mm; D'ANGOLO N.A.

DEPOSITO DI SALDATURA: per TIG (GTAW) 16.5 mm; per ELE (SMAW) N.A.; per AS (SAW) N.A.

GAMMA DIAM. TUBI: N.A; IN CIANFRINO N.A.; D'ANGOLO N.A.

ALTRI

MATERIALI D'APPORTO/Filler Metals (QW 404): TIG (GTAW) F-No 6, A-No N.A (See NOTE 1), No. SFA 5.9, AWS 5.9 No ER 317L MOD, Diametro Vergella 2.4 mm, Trade Name BOHLER ASN5-IG; ELE (SMAW); FILO (Elect); Flusso (FLUX) nome commerciale flusso / flux trade name, Classificazione filo- flusso / Electrode- flux class.

	C	Si	Mn	P	S	Cr	Ni	Mo	N	Cu
NOTE 1 BOHLER ASN5-IG	0.02	0.4	5.2	0.01	<001	18.7	17.0	4.0	0.15	<0.1

SPECIFICA PROCEDIMENTO DI SALDATURA SECONDO ASME IX — WPS ASG 74/13 PQR GD0003/13 Foglio 1/2

POSIZIONI/Positions (QW 405): IN CIANFRINO/Groove 3G; IN ANGOLO/Fillet N.A.; PROGRESS. DI SALD./Welding Progression RIM/Upwards DISCEND./Down —

TRATTAMENTO TERMICO/Post weld heat treatment (QW407): TEMPERATURA NR; TEMPO DI REGIME NR; GRADIENTE NR; ALTRI/Others

PRERISCALDO/Preheat (QW406): TEMPERATURA Min. 20 °C; INTERPASS 20 °C; DURATA PRERISCALDO N.A.; OTHER: Temp. tra i tratti di sald. 20 °C

GAS (QW408): GAS DI PROTEZ. ARGON; COMPOS. PERC. (%) 99.995; PORTATA/Flow Rate 10 l/min; PROTEZ. AL ROVESCIO ARGON; Gas Backing 8-10 l/min; Trailing Shielding gas: NO

CARATT. ELETTRICHE/Electrical Characteristics (QW409):

PASSATE Weld Passes	PROCED Processes	MATER. D'APPORTO Filler metals Ø mm	TIPO/Type	CORRENTE Current	POLARITA' Electrode Polarity	A Amp.	V Volt	VELOC. LAVORO Travel Speed mm/min
1	GTAW	2.4	ASN5-IG	DC	(-)	95+/-5	11+/-1	45-55
2-n	GTAW	2.4	ASN5-IG	DC	(-)	105+/-5	12+/-1	45-55

DIAM. E TIPO DI TUNGSTENO/Tungsten Electrode Size and type: AWS A5.12 EWth 2 diam. 2.4mm

TIPO DI TRASF. MAT. PER MAG/Mode of metal transfer for GMAW: N.A.

VELOCITA' DEL FILO DI ALIMENTAZ./Elect. wire feed speed range: N.A.

TECNICA/Technique (QW410): PASSATA STRETTA / LARGA X; DIAM. FORO UGELLO GAS NR 6, inner bore 10mm; PULIZIA INIZIALE E TRA LE PASSATE; OSCILLAZIONE N.R; SPAZZOLATURA X / MOLATURA X; DISTANZA DELL'UGELLO DAL PEZZO N.R; METODO DI SOLCATURA AL ROVESCIO; MOLATURA N.R.; MARTELLATURA (Peening) N.R; ALTRI/ Others; PASSATA SINGOLA / MULTIPLE X; APPORTO TERMICO/ Weld passes: 1 0.98-1.60, 2-n 1.20-1.90; ELETTRODO SINGOLO / MULTIPLI X

DATA Date	PREPARATO prepared	CONTROLLATO checked	VERIFICATO checked	EMESSO issued
27/05/13	PRS		GGL	PRS

Picture 36

In order to avoid to have different welding deposit thicknesses, in correspondence of the welding cross, that should generate problems at the start/end of the welding run, it was decided to fill uniformly the different joints, completing the same welding layer for all the joints, before performing the next.

The first GTAW pass was performed according to the sequence shown in Picture 37. The backing gas protection was performed by inserting a 6x1mm pipe alternatively inside the channels present behind each joint. For this reason the cross area was left unwelded up to the completion of the entire GTAW root pass

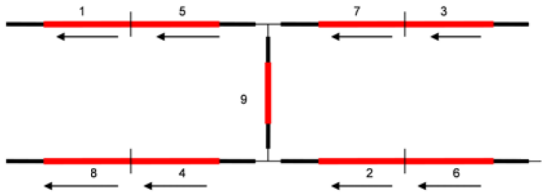

Picture 37

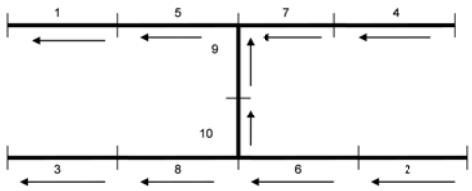

Picture 38

Then, the two cross and the wall breakage in correspondence of the vertical joint were closed by a GTAW pass, performed in longitudinal direction and with backing gas shielding in the longitudinal channel.
The second GTAW layer (2 passes) was then performed according to the sequence in Picture 38.

The longitudinal welds were be filled then with GMAW passes, while the joint between covers was completed by GTAW. The adopted sequences are shown in Picture 39 (GTAW) and 40 (GMAW).

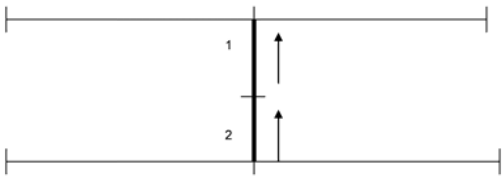

Picture 39

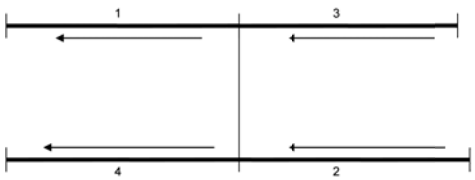

Picture 40

In order to keep the weld deposit thickness uniform in all the champers, 5 filling GTAW passes were performed first on the vertical joint and after 2 filling GMAW passes were performed on the longitudinal ones. Following this approach, additional 2 GTAW on the vertical joint with 3 GMAW on the longitudinal and finally 7 GTAW on vertical and 3 GMAW passes were done for completing these welds.
Intermediate and final results are shown in Pictures 41, 42, 43, 44, 45.

Picture 41

Picture 42

Picture 43

Picture 44

Picture 45

A final dye penetrant test has been performed without evidencing any defects.

The mock-up has been cut in two parts, allowing removing the backing strip behind the transverse weld and the vertical weld between covers. Full penetration and proper backing gas shielding have been detected at Visual Inspection

The welds have been grinded in order to get a flush surface and dispatched to an NDT Company for UT inspection. This activity includes also the development of a dedicated NDT procedure and preparation of appropriate calibration blocks and is ongoing.

ASG Superconductors	RAPPORTO DI CONTROLLO *Inspection Report*	MA132802
	☐ IN APPROVVIGIONAMENTO *on purchasing* ☒ IN FABBRICAZIONE *on manufacturing*	Pag. 1 di 1

COMMESSA/*Job*	LOTTO/*Lot*	COMPONENTE/*Item code*	DISEGNO/*Drawing*	POS/*Item*	REV./*Rev.*	B.A.M./*Work note*
RS24 - 2053			DWG-12110.03 FG. 1 a 4			

IMPIANTO *plant*	CLIENTE /*customer*	*PCF*	*REV.*	*ITEM*
TFC FOR JT60SA	ENEA – F4E	**QCP-JT60-ASG-90.12110.03**	**0**	2.3 - 3.3

SPECIFICA/*Specification*	REV./*Rev.*	STAMPIGLIATURE/*Stamps*
700RM14583	0	**JTASMU01 JTASMU02** **JTASMU03-A JTASMU03-B** **JTASMU04-A JTASMU04-B**

DESCRIZIONE PRODOTTO/*Item*

Coil case mock-up

Strumentazione/*Instruments*:
Measuring Laser Tracker API R-20 Radian s.n. 60024

Esito/*Result:*	conforme/ *conforming* ☐	non conforme/ *non-conforming* ☐ RNC No. ……	N.A. n/a ☒

COGNOME *Name*	A.Scimone					
FIRMA *Signature*	Scimone					
DATA *Date*	08/07/13					
ENTE *Department*	ASG/GQL					

SALDATURA TRASVERSALE

Nome riferimenti

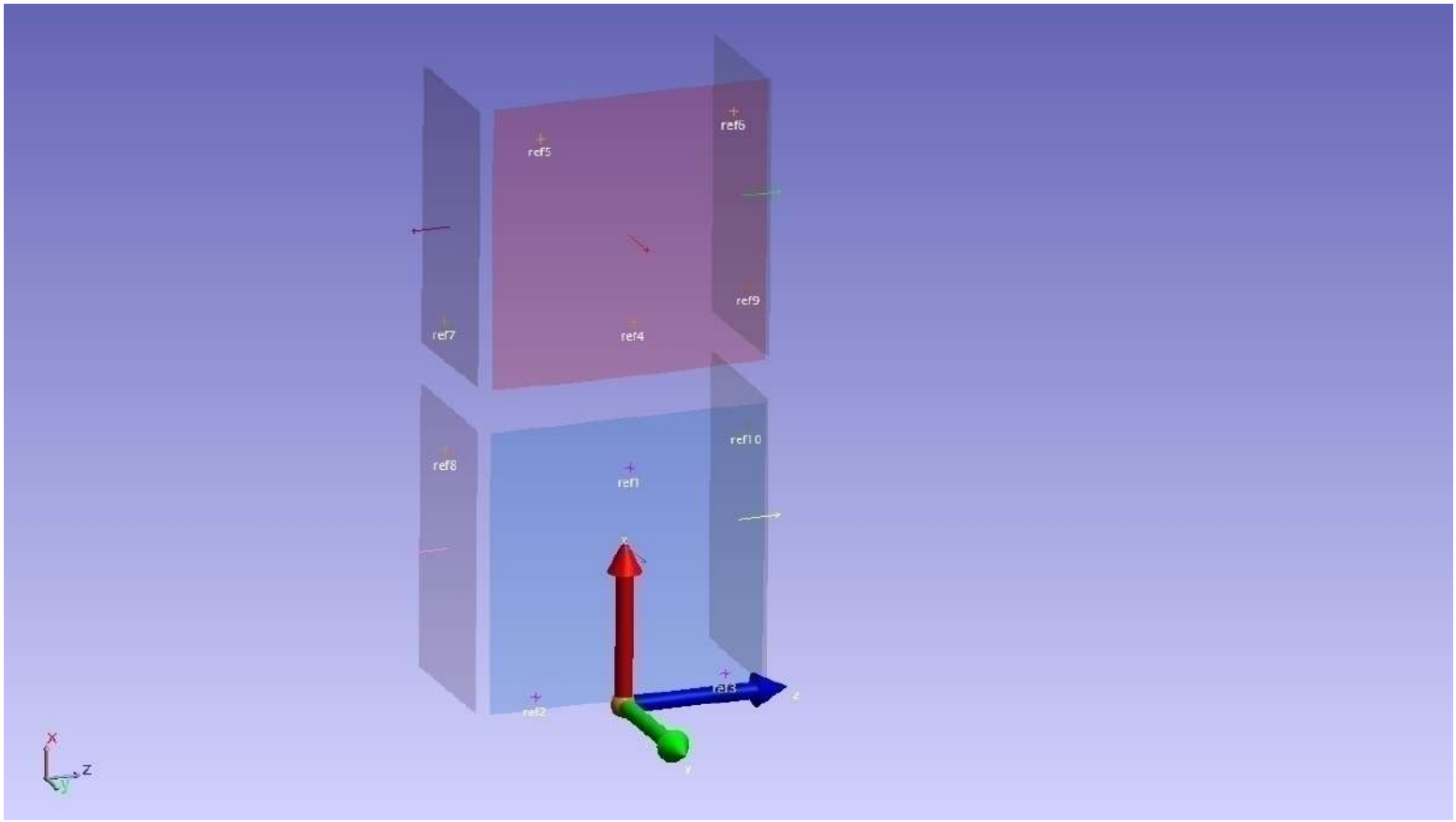

Nota: Ad ogni controllo, l'allineamento del braccio veniva effettuato ai REF: 1, 2, 3

Il sistema di riferimento usato è sempre lo stesso per ogni controllo

Scostamento REF 1, 2, 3 al 1° controllo (DOPO RADICI DI SALDATURA TIG)

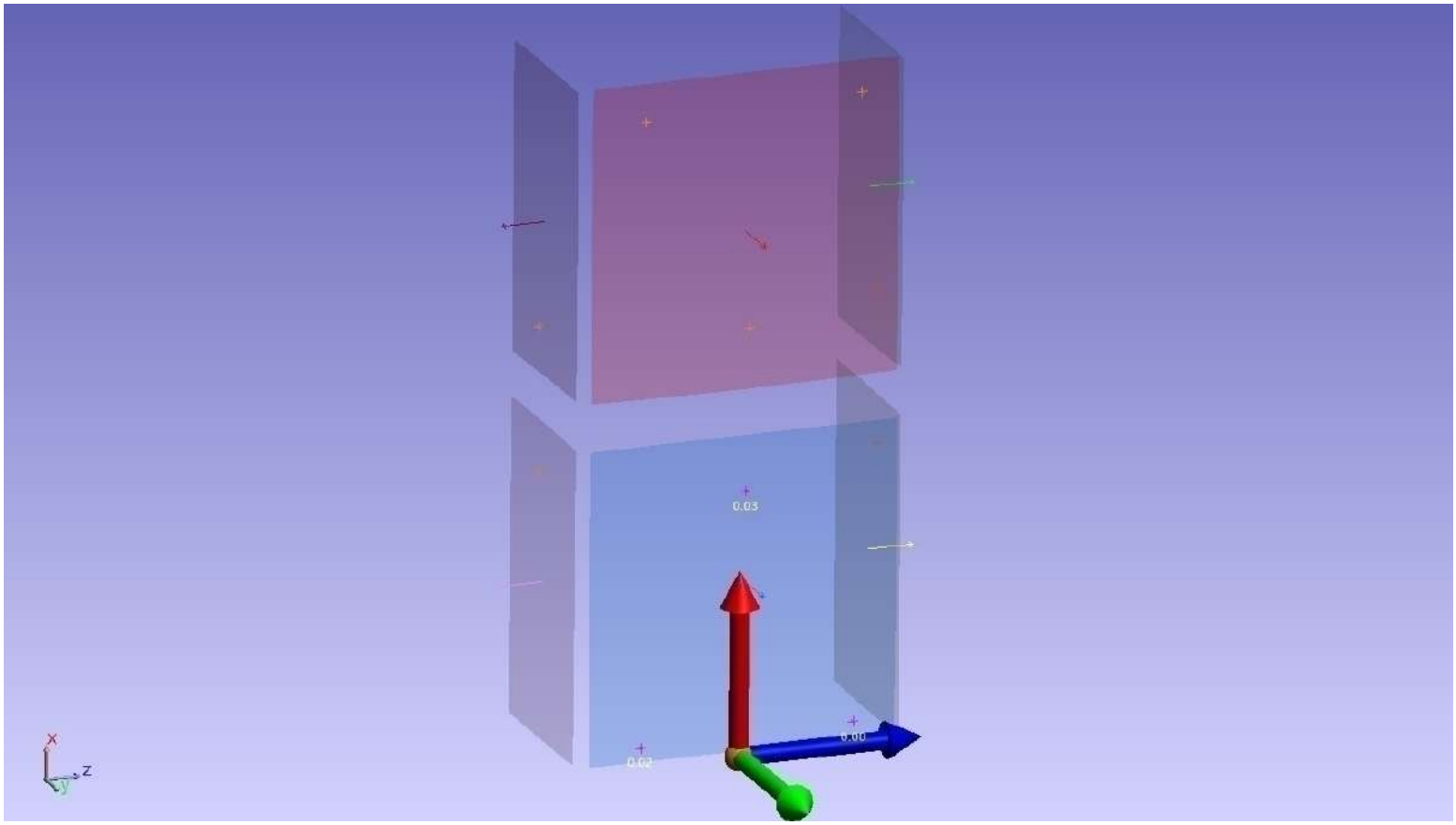

All Vectors Summary: Vector Group 1° controllo 27/05/2013::Allineamento REF 1° controllo				
Statistic	dX	dY	dZ	Mag
Min	-0.02	-0.00	-0.01	0.00
Max	0.02	0.00	0.01	0.03
Average	-0.00	-0.00	0.00	0.02
StdDev from Avg	0.02	0.00	0.01	0.01
StdDev from Zero	0.02	0.00	0.01	0.02
RMS	0.02	0.00	0.01	0.02
Count	3			

Vector Group 1° controllo 27/05/2013::Allineamento REF 1° controllo					
Name	Delta				
	dX	dY	dZ	Mag	
ref1	0.02	0.00	0.01	0.03	
ref2	-0.02	-0.00	-0.01	0.02	
ref3	-0.00	-0.00	-0.00	0.00	

Scostamento REF 1, 2, 3 al 2° controllo (DOPO N°3 PASSATE DI RIEMPIMENTO TIG)

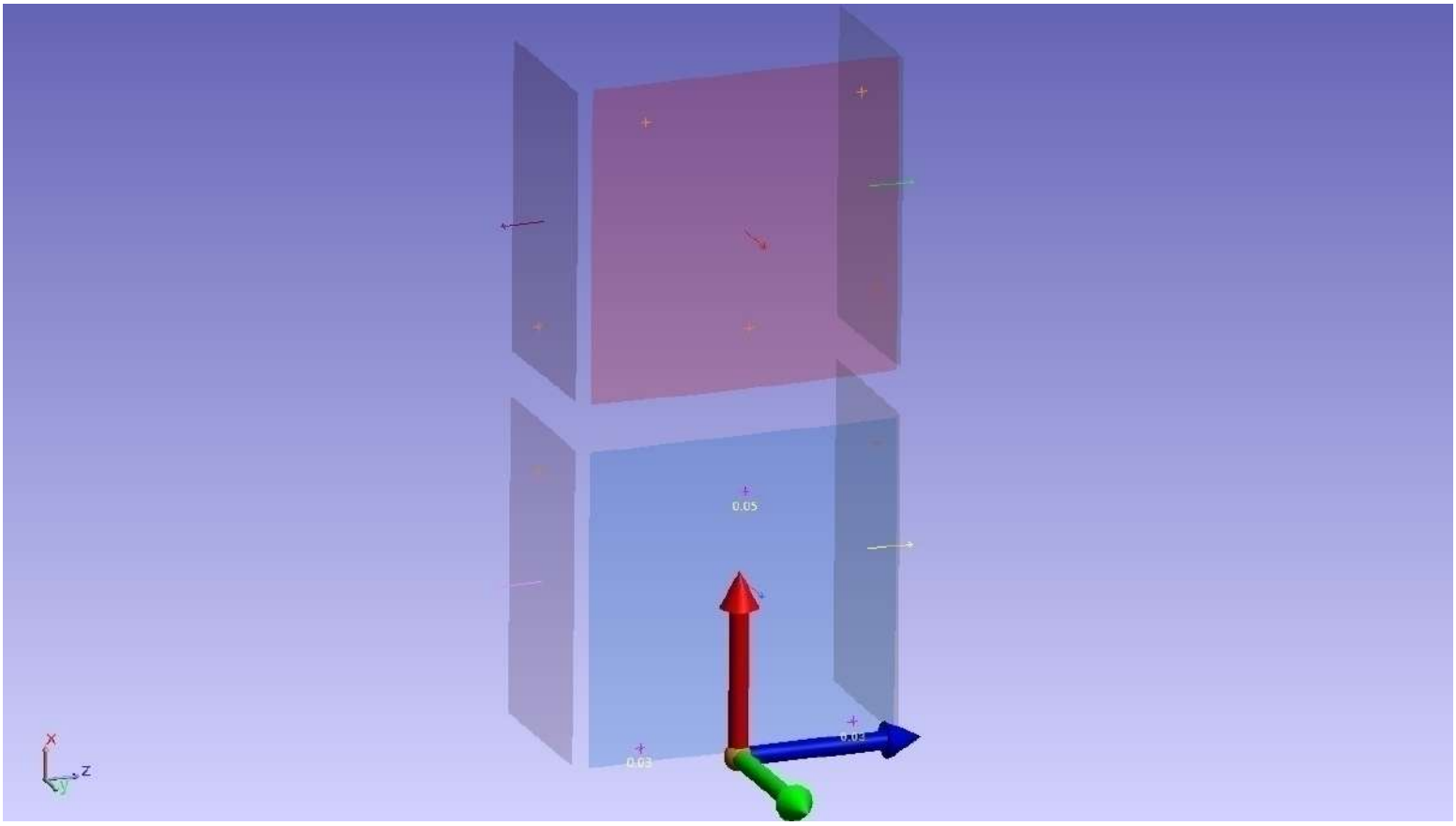

All Vectors Summary: Vector Group 2° controllo 28/05/2013::Allineamento REF 2° controllo				
Statistic	dX	dY	dZ	Mag
Min	-0.03	-0.00	-0.00	0.03
Max	0.05	0.00	0.01	0.05
Average	0.00	0.00	0.00	0.04
StdDev from Avg	0.05	0.00	0.01	0.01
StdDev from Zero	0.05	0.00	0.01	0.05
RMS	0.04	0.00	0.00	0.04
Count	3			

Vector Group 2° controllo 28/05/2013::Allineamento REF 2° controllo					
Name	Delta				
	dX	dY	dZ	Mag	
ref1	0.05	0.00	-0.00	0.05	
ref2	-0.03	-0.00	-0.00	0.03	
ref3	-0.03	-0.00	0.01	0.03	

Scostamento REF 1, 2, 3 al 3° controllo (DOPO 1a PASSATA DI RIEMPIMENTO CIRCA 15 mm - FILO)

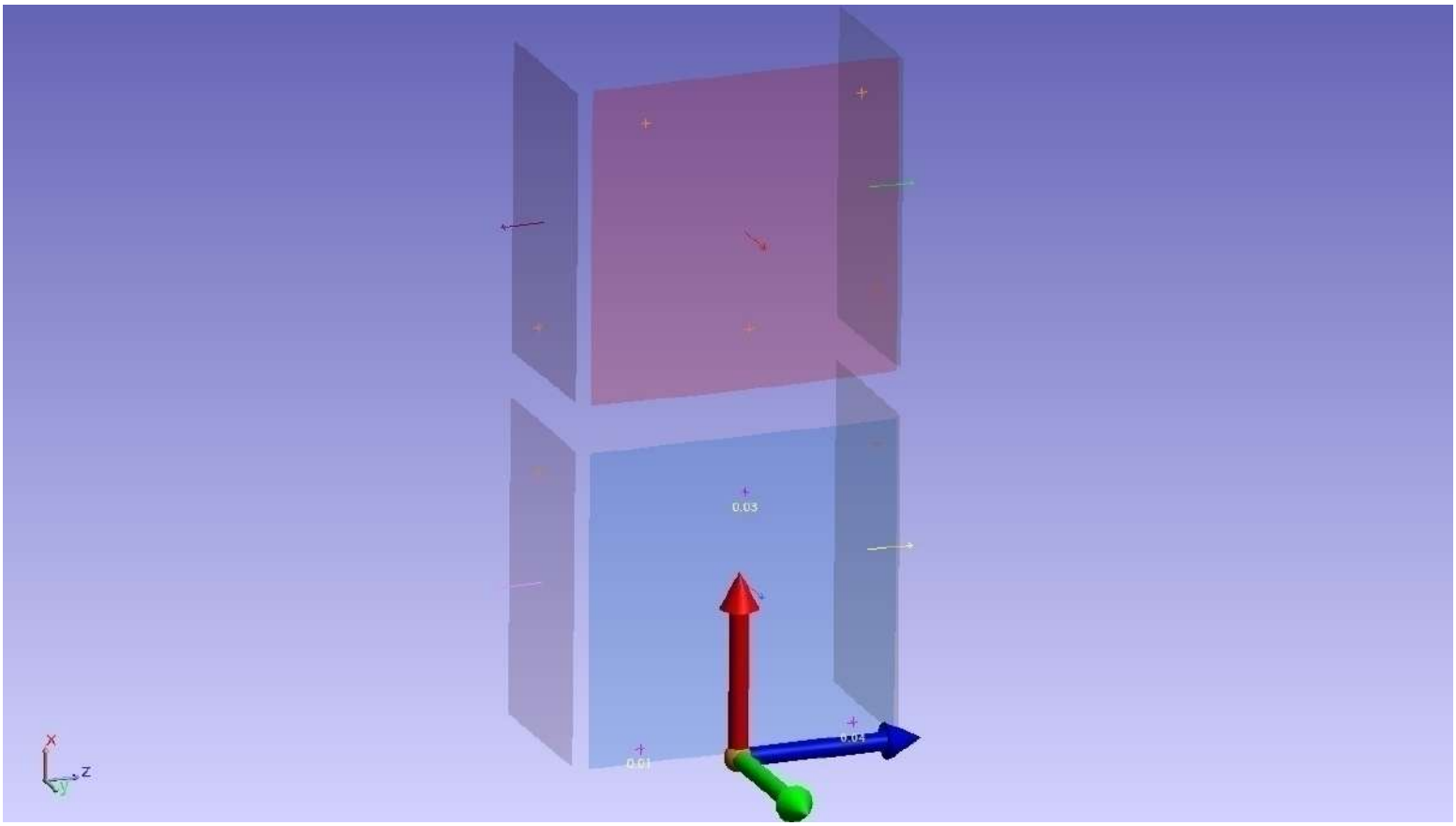

All Vectors Summary: Vector Group 3° controllo 29/05/2013::Allineamento REF 3° controllo				
Statistic	dX	dY	dZ	Mag
Min	-0.03	-0.00	-0.01	0.01
Max	0.03	0.00	0.02	0.04
Average	-0.00	0.00	-0.00	0.03
StdDev from Avg	0.03	0.00	0.02	0.02
StdDev from Zero	0.03	0.00	0.02	0.04
RMS	0.03	0.00	0.01	0.03
Count	3			

Vector Group 3° controllo 29/05/2013::Allineamento REF 3° controllo					
Name	Delta				
	dX	dY	dZ	Mag	
ref1	0.03	0.00	-0.01	0.03	
ref2	-0.00	0.00	-0.01	0.01	
ref3	-0.03	-0.00	0.02	0.04	

Scostamento REF 1, 2, 3 al 4° controllo (DOPO 2a PASSATA DI RIEMPIMENTO CIRCA 15 mm - FILO)

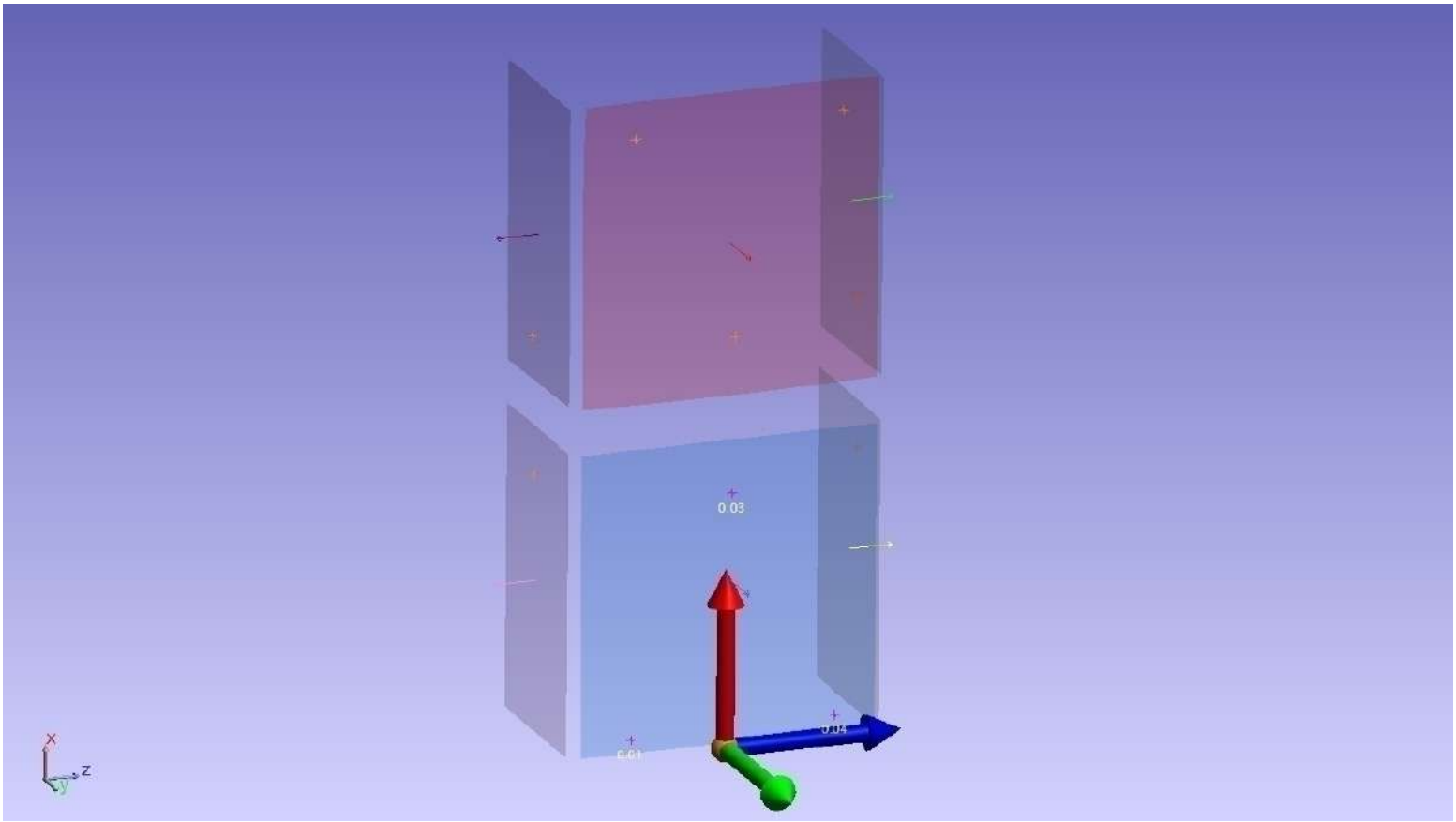

All Vectors Summary: Vector Group 4° controllo 30/05/2013::Allineamento REF 4° controllo				
Statistic	dX	dY	dZ	Mag
Min	-0.03	-0.00	-0.01	0.01
Max	0.03	0.00	0.02	0.04
Average	-0.00	0.00	-0.00	0.03
StdDev from Avg	0.03	0.00	0.02	0.02
StdDev from Zero	0.03	0.00	0.02	0.04
RMS	0.03	0.00	0.01	0.03
Count	3			

Vector Group 4° controllo 30/05/2013::Allineamento REF 4° controllo					
Name	Delta				
	dX	dY	dZ	Mag	
ref1	0.03	0.00	-0.01	0.03	
ref2	-0.00	0.00	-0.01	0.01	
ref3	-0.03	-0.00	0.02	0.04	

Scostamento REF 1, 2, 3 al 5° controllo (DOPO 3a PASSATA DI RIEMPIMENTO CIRCA 10 mm - FILO)

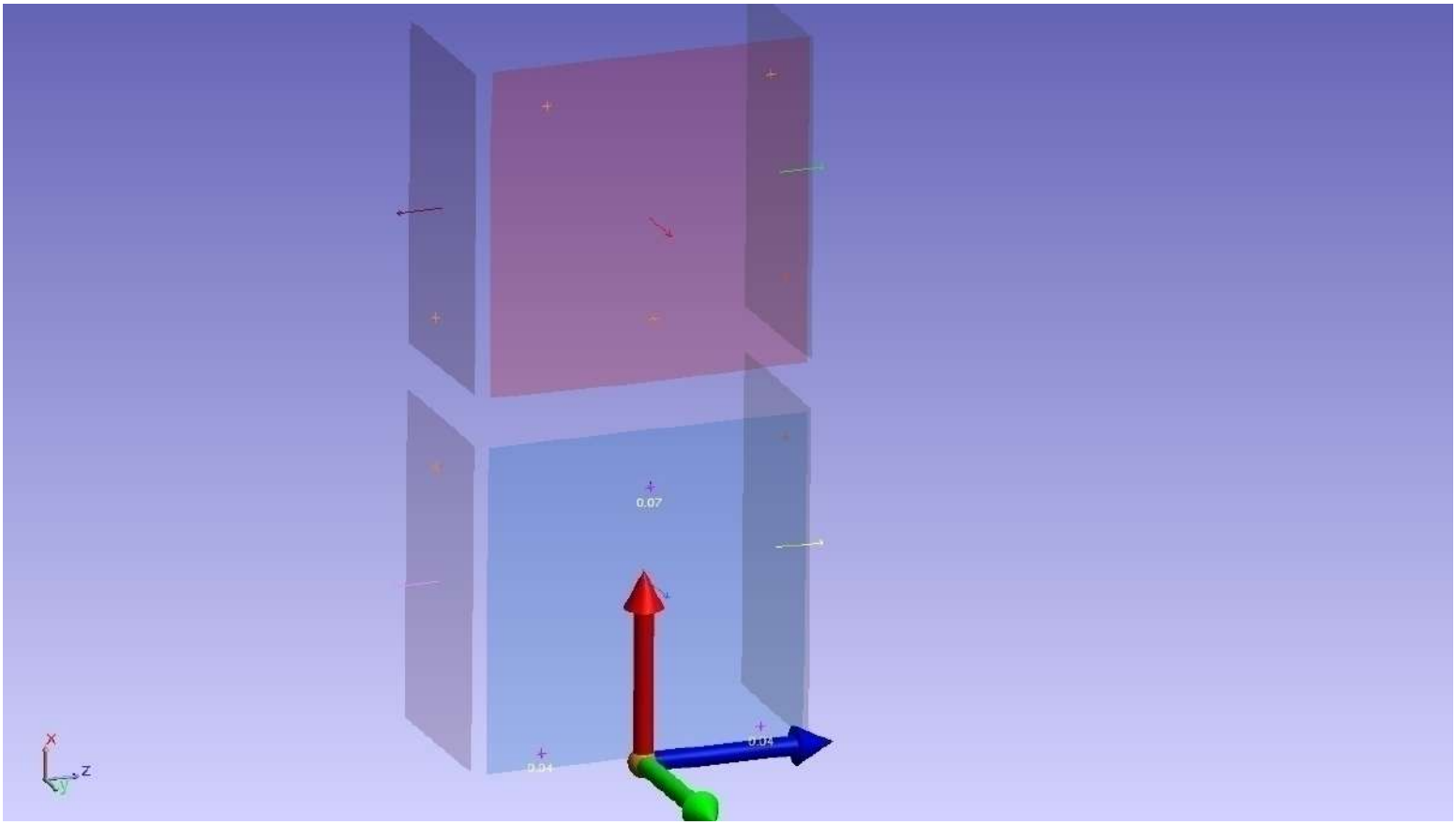

All Vectors Summary: Vector Group 5° controllo 03/06/2013::Allineamento REF 5° controllo				
Statistic	dX	dY	dZ	Mag
Min	-0.04	-0.00	-0.02	0.04
Max	0.07	0.00	0.02	0.07
Average	0.00	0.00	0.00	0.05
StdDev from Avg	0.06	0.00	0.02	0.02
StdDev from Zero	0.06	0.00	0.02	0.06
RMS	0.05	0.00	0.01	0.05
Count	3			

Vector Group 5° controllo 03/06/2013::Allineamento REF 5° controllo					
Name	Delta				
	dX	dY	dZ	Mag	
ref1	0.07	0.00	-0.00	0.07	
ref2	-0.04	-0.00	0.02	0.04	
ref3	-0.04	-0.00	-0.02	0.04	

Scostamento REF 4 ÷ REF 10 al 1° controllo (DOPO RADICI DI SALDATURA TIG)

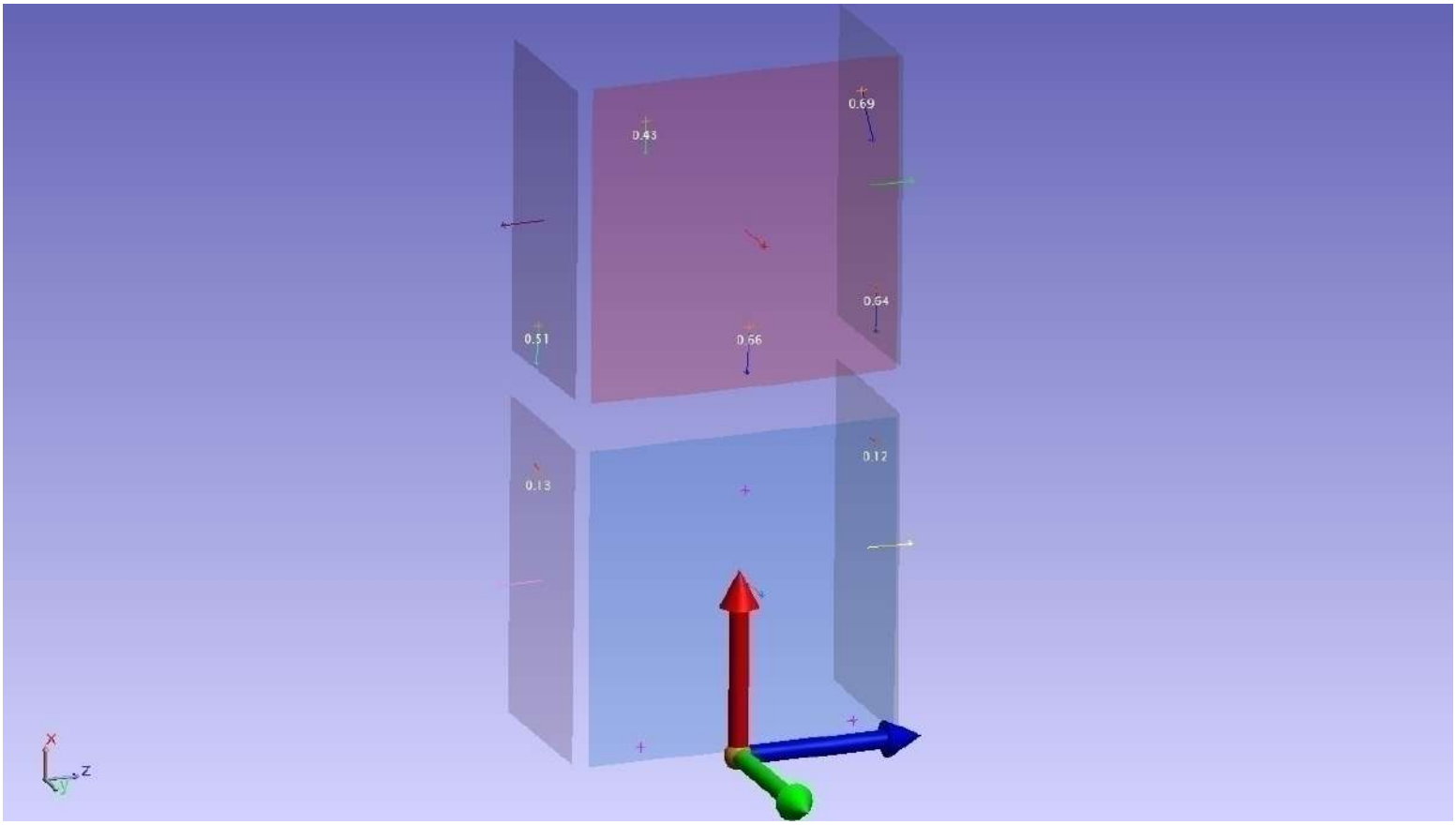

All Vectors Summary: Vector Group 1° controllo 27/05/2013::REF1-REF1				
Statistic	dX	dY	dZ	Mag
Min	-0.67	-0.11	-0.08	0.12
Max	0.10	0.11	0.12	0.69
Average	-0.39	0.01	-0.01	0.45
StdDev from Avg	0.32	0.08	0.07	0.24
StdDev from Zero	0.53	0.08	0.07	0.54
RMS	0.49	0.08	0.06	0.50
Count	7			

Vector Group 1° controllo 27/05/2013::REF1-REF1					
Name	Delta				
	dX	dY	dZ	Mag	
ref4	-0.66	-0.05	-0.02	0.66	
ref5	-0.41	0.10	-0.03	0.43	
ref6	-0.67	0.11	0.12	0.69	
ref7	-0.50	0.05	-0.05	0.51	
ref8	0.10	0.02	-0.08	0.13	
ref9	-0.63	-0.06	0.02	0.64	
ref10	0.01	-0.11	-0.04	0.12	

Scostamento REF 4 ÷ REF 10 al 2° controllo (DOPO N°3 PASSATE DI RIEMPIMENTO TIG)

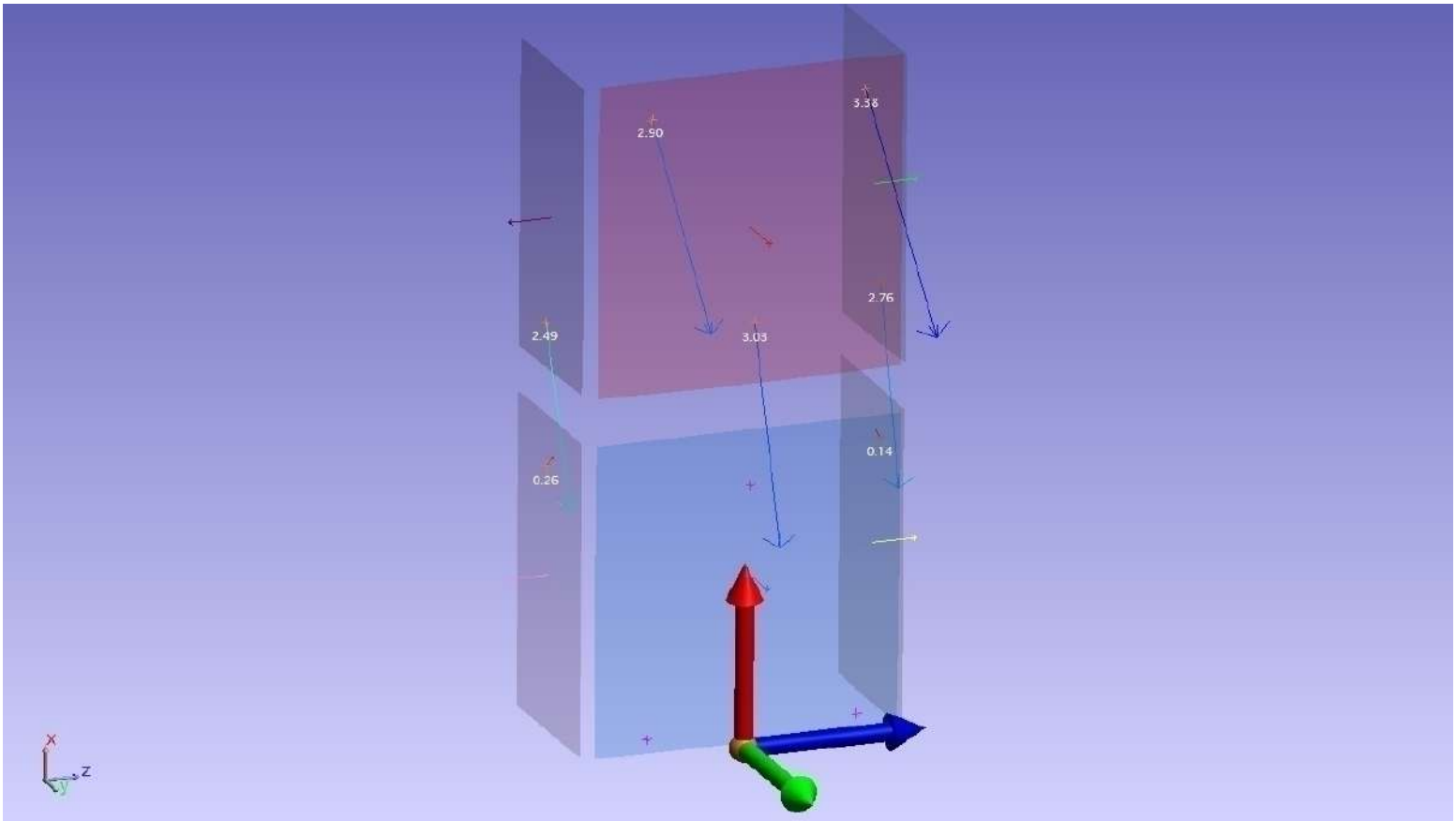

All Vectors Summary: Vector Group 2° controllo 28/05/2013::REF1-REF1				
Statistic	dX	dY	dZ	Mag
Min	-3.13	-0.11	-0.02	0.14
Max	0.18	1.16	0.58	3.38
Average	-1.95	0.51	0.22	2.14
StdDev from Avg	1.44	0.48	0.21	1.35
StdDev from Zero	2.55	0.73	0.32	2.67
RMS	2.36	0.68	0.29	2.48
Count	7			

Vector Group 2° controllo 28/05/2013::REF1-REF1					
Name	Delta				
	dX	dY	dZ	Mag	
ref4	-2.99	0.40	0.23	3.03	+
ref5	-2.63	1.16	0.41	2.90	+
ref6	-3.13	1.13	0.58	3.38	+
ref7	-2.42	0.57	0.14	2.49	+
ref8	0.18	0.18	0.02	0.26	
ref9	-2.75	0.25	0.18	2.76	+
ref10	0.08	-0.11	-0.02	0.14	

Scostamento REF 4 ÷ REF 10 al 3° controllo (DOPO 1a PASSATA DI RIEMPIMENTO CIRCA 15 mm - FILO)

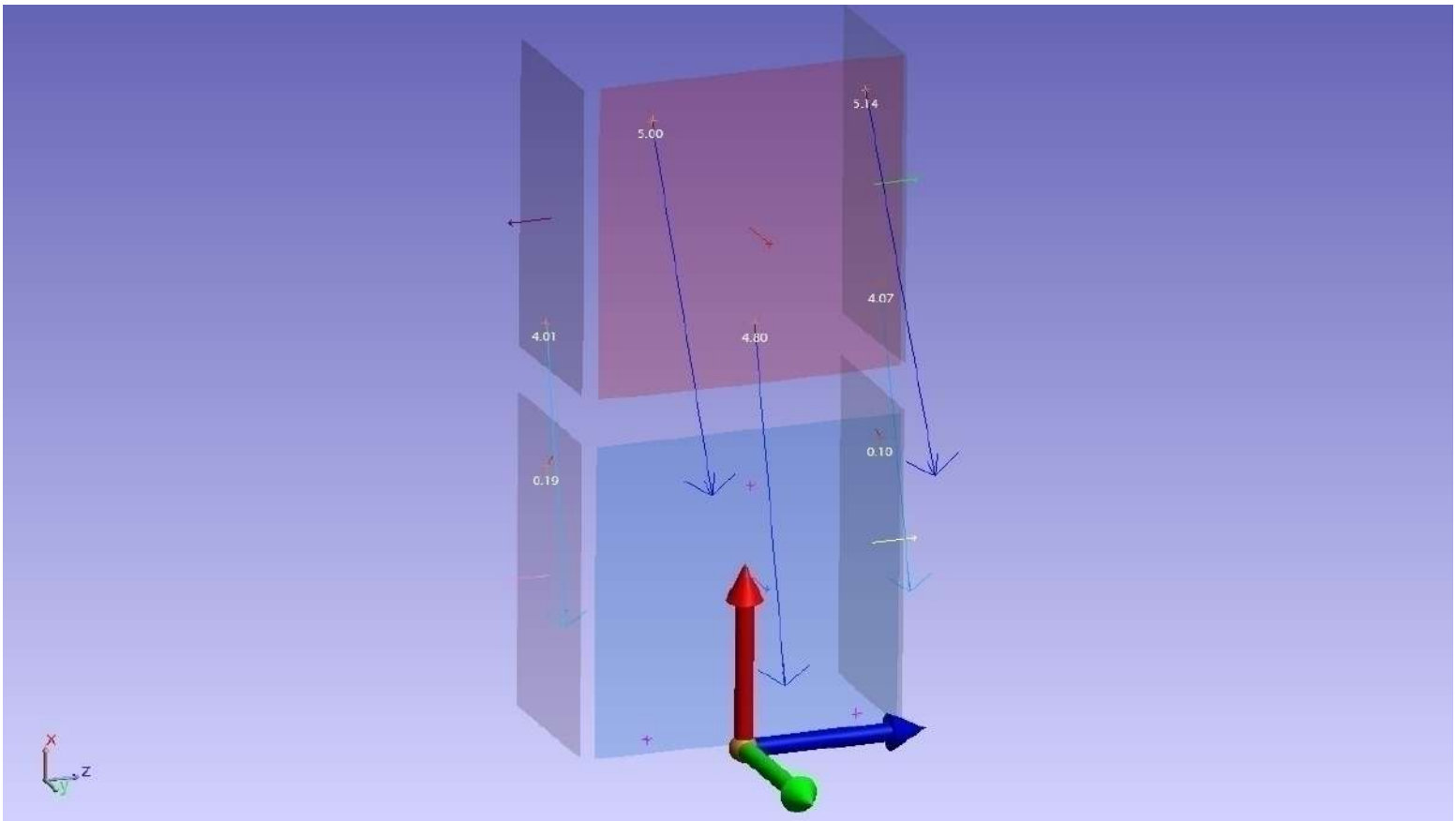

All Vectors Summary: Vector Group 3° controllo 29/05/2013::REF1-REF1				
Statistic	dX	dY	dZ	Mag
Min	-4.70	-0.12	-0.03	0.10
Max	0.09	2.26	0.18	5.14
Average	-3.08	0.97	0.08	3.33
StdDev from Avg	2.18	0.95	0.08	2.22
StdDev from Zero	3.98	1.41	0.12	4.23
RMS	3.68	1.31	0.11	3.91
Count	7			

Vector Group 3° controllo 29/05/2013::REF1-REF1					
Name	Delta				
	dX	dY	dZ	Mag	
ref4	-4.70	0.93	0.11	4.80	+
ref5	-4.46	2.26	0.02	5.00	+
ref6	-4.66	2.16	0.18	5.14	+
ref7	-3.92	0.84	-0.00	4.01	+
ref8	0.08	-0.12	0.13	0.19	
ref9	-3.99	0.78	0.14	4.07	+
ref10	0.09	-0.04	-0.03	0.10	

Scostamento REF 4 ÷ REF 10 al 4° controllo (DOPO 2a PASSATA DI RIEMPIMENTO CIRCA 15 mm - FILO)

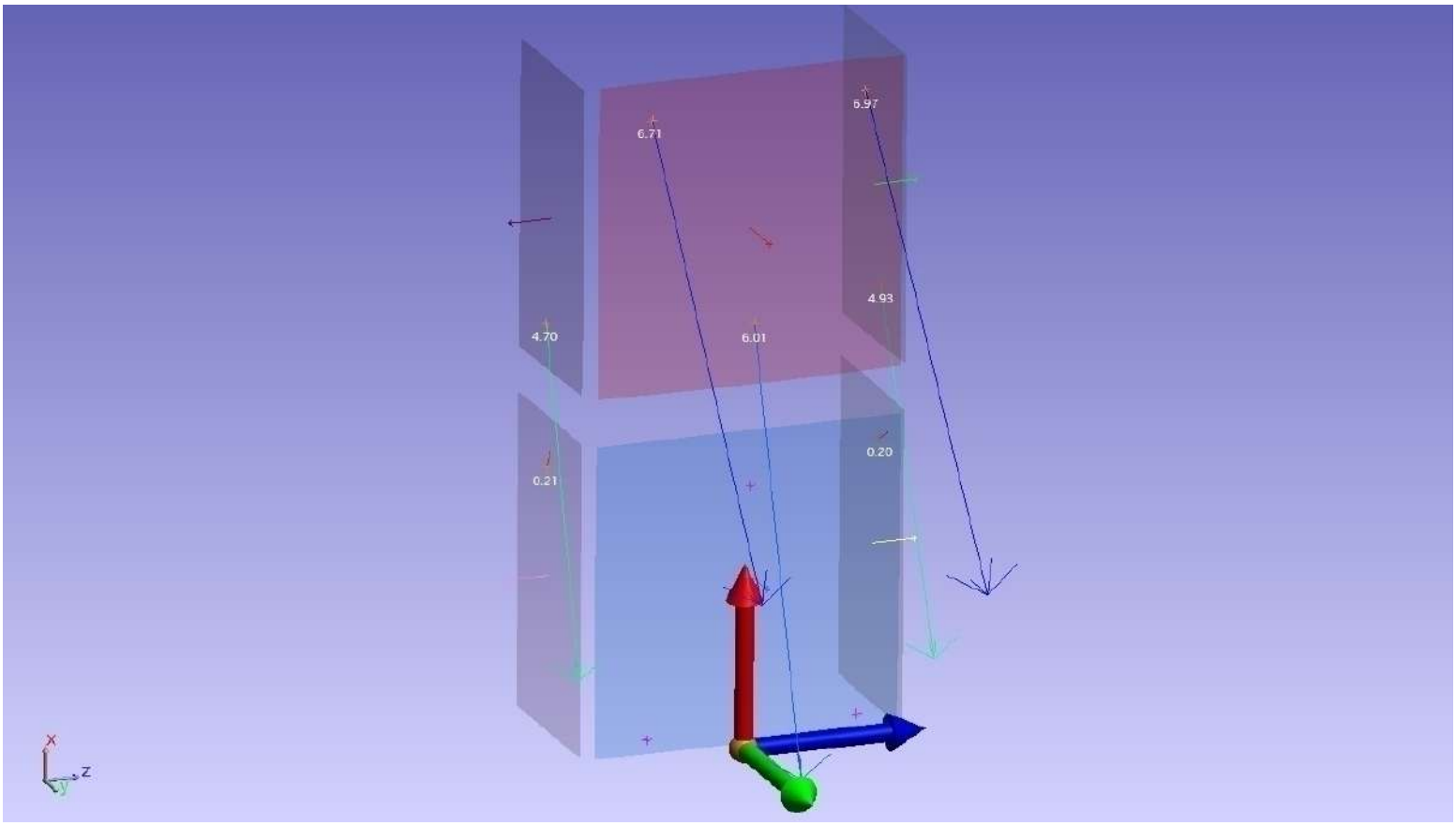

All Vectors Summary: Vector Group 4° controllo 30/05/2013::REF1-REF1				
Statistic	dX	dY	dZ	Mag
Min	-5.82	0.03	-0.03	0.20
Max	0.20	3.94	0.25	6.97
Average	-3.70	1.77	0.11	4.25
StdDev from Avg	2.69	1.59	0.10	2.89
StdDev from Zero	4.82	2.48	0.15	5.42
RMS	4.46	2.30	0.14	5.02
Count	7			

Vector Group 4° controllo 30/05/2013::REF1-REF1					
Name	Delta				
	dX	dY	dZ	Mag	
ref4	-5.82	1.48	0.13	6.01	+
ref5	-5.48	3.88	0.11	6.71	+
ref6	-5.75	3.94	0.25	6.97	+
ref7	-4.49	1.38	-0.03	4.70	+
ref8	0.20	0.03	0.03	0.21	
ref9	-4.70	1.50	0.21	4.93	+
ref10	0.12	0.15	0.05	0.20	

Scostamento REF 4 ÷ REF 10 al 5° controllo (DOPO 3a PASSATA DI RIEMPIMENTO CIRCA 10 mm - FILO)

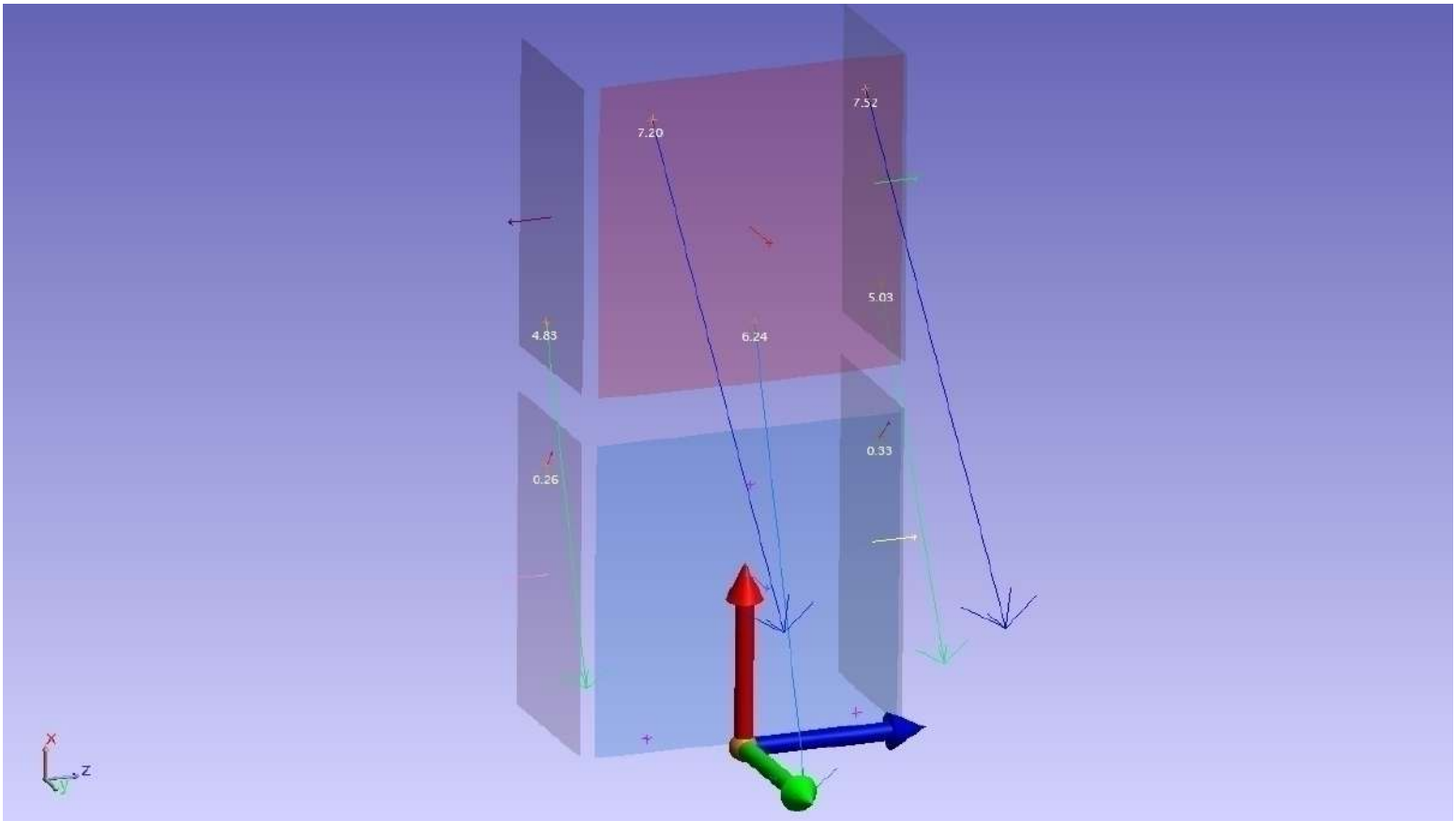

All Vectors Summary: Vector Group 5° controllo 03/06/2013::REF1-REF1				
Statistic	dX	dY	dZ	Mag
Min	-6.07	0.15	-0.02	0.26
Max	0.25	4.43	0.32	7.52
Average	-3.81	2.00	0.15	4.49
StdDev from Avg	2.82	1.76	0.14	3.03
StdDev from Zero	4.99	2.79	0.21	5.72
RMS	4.62	2.58	0.20	5.30
Count	7			

Vector Group 5° controllo 03/06/2013::REF1-REF1					
Name	Delta				
	dX	dY	dZ	Mag	
ref4	-6.03	1.60	0.16	6.24	+
ref5	-5.73	4.36	0.24	7.20	+
ref6	-6.07	4.43	0.32	7.52	+
ref7	-4.54	1.63	-0.02	4.83	+
ref8	0.21	0.15	0.02	0.26	
ref9	-4.75	1.65	0.30	5.03	+
ref10	0.25	0.21	0.05	0.33	

Scostamento Punti laterali al 1° controllo

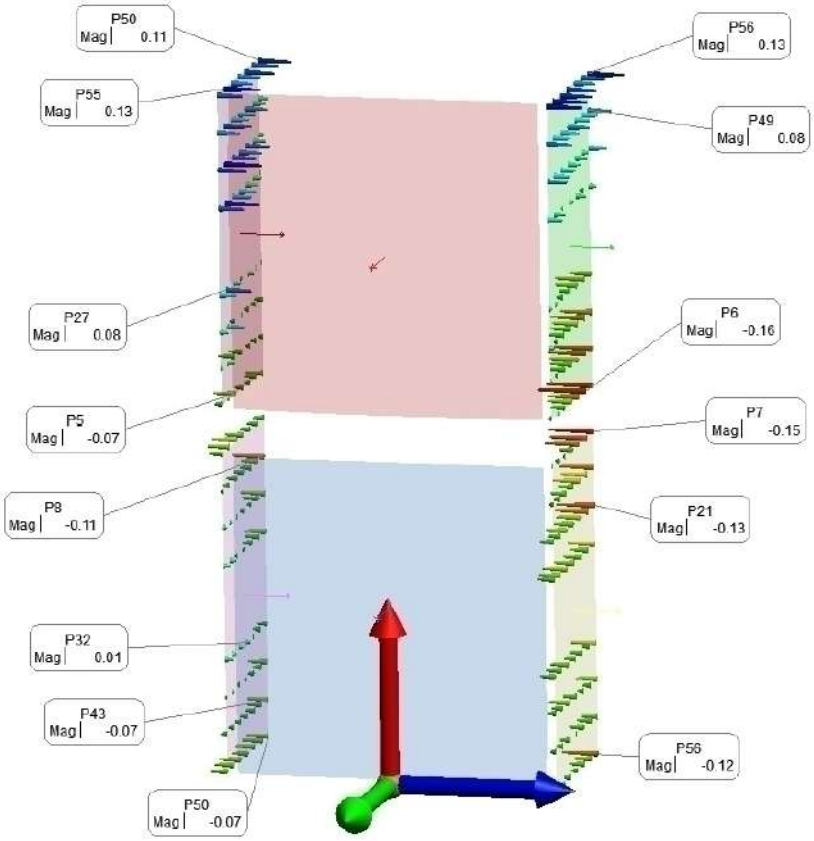

All Vectors Summary: Vector Group 1° controllo 27/05/2013::Scostamento Punti laterali al 1° controllo				
Statistic	dX	dY	dZ	Mag
Min	-0.00	-0.00	-0.16	-0.16
Max	0.00	0.00	0.13	0.13
Average	0.00	0.00	-0.01	-0.01
StdDev from Avg	0.00	0.00	0.06	0.06
StdDev from Zero	0.00	0.00	0.06	0.06
RMS	0.00	0.00	0.06	0.06
Count	224			

Scostamento Punti frontali al 1° controllo

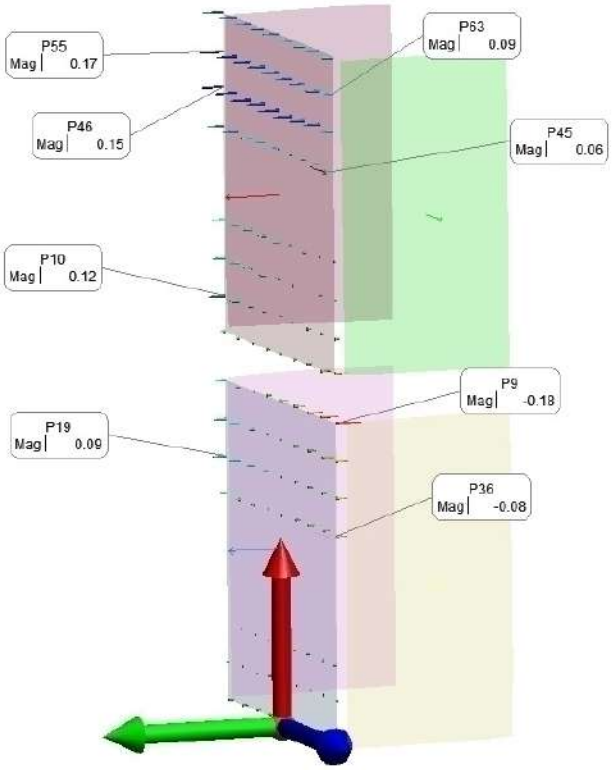

All Vectors Summary: Vector Group 1° controllo 27/05/2013::Scostamento Punti frontali al 1° controllo				
Statistic	dX	dY	dZ	Mag
Min	-0.00	-0.18	-0.00	-0.18
Max	0.00	0.17	0.00	0.17
Average	0.00	0.03	-0.00	0.03
StdDev from Avg	0.00	0.07	0.00	0.07
StdDev from Zero	0.00	0.07	0.00	0.07
RMS	0.00	0.07	0.00	0.07
Count	132			

Scostamento Punti laterali al 2° controllo

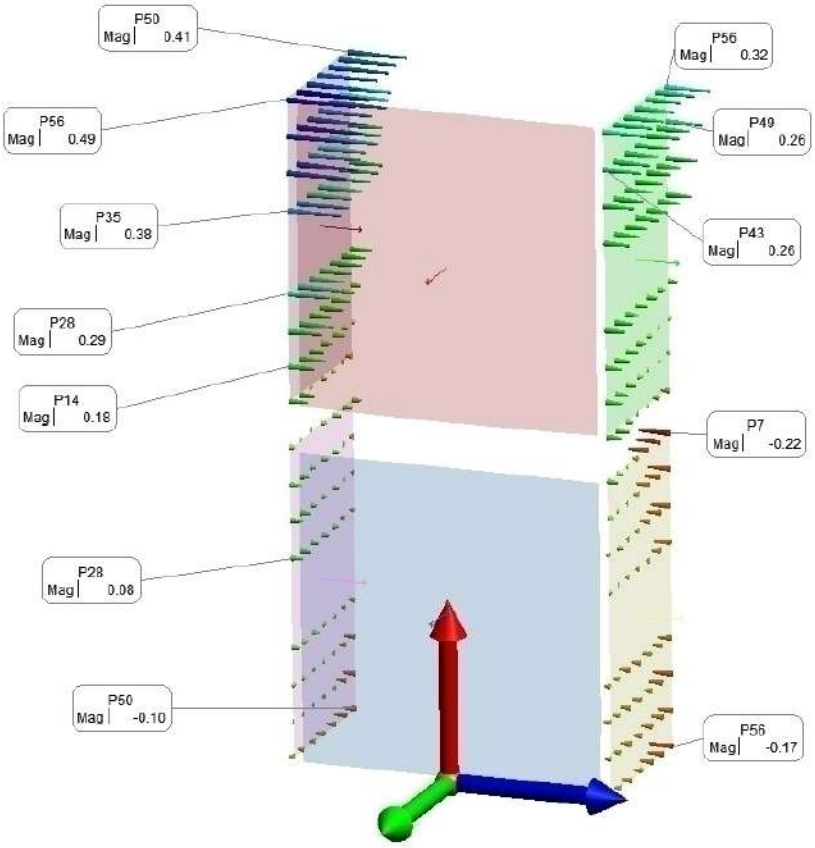

All Vectors Summary: Vector Group 2° controllo 28/05/2013::Scostamento Punti laterali al 2° controllo				
Statistic	dX	dY	dZ	Mag
Min	-0.00	-0.00	-0.22	-0.22
Max	0.00	0.00	0.52	0.52
Average	0.00	-0.00	0.08	0.08
StdDev from Avg	0.00	0.00	0.15	0.15
StdDev from Zero	0.00	0.00	0.17	0.17
RMS	0.00	0.00	0.17	0.17
Count	224			

Scostamento Punti frontali al 2° controllo

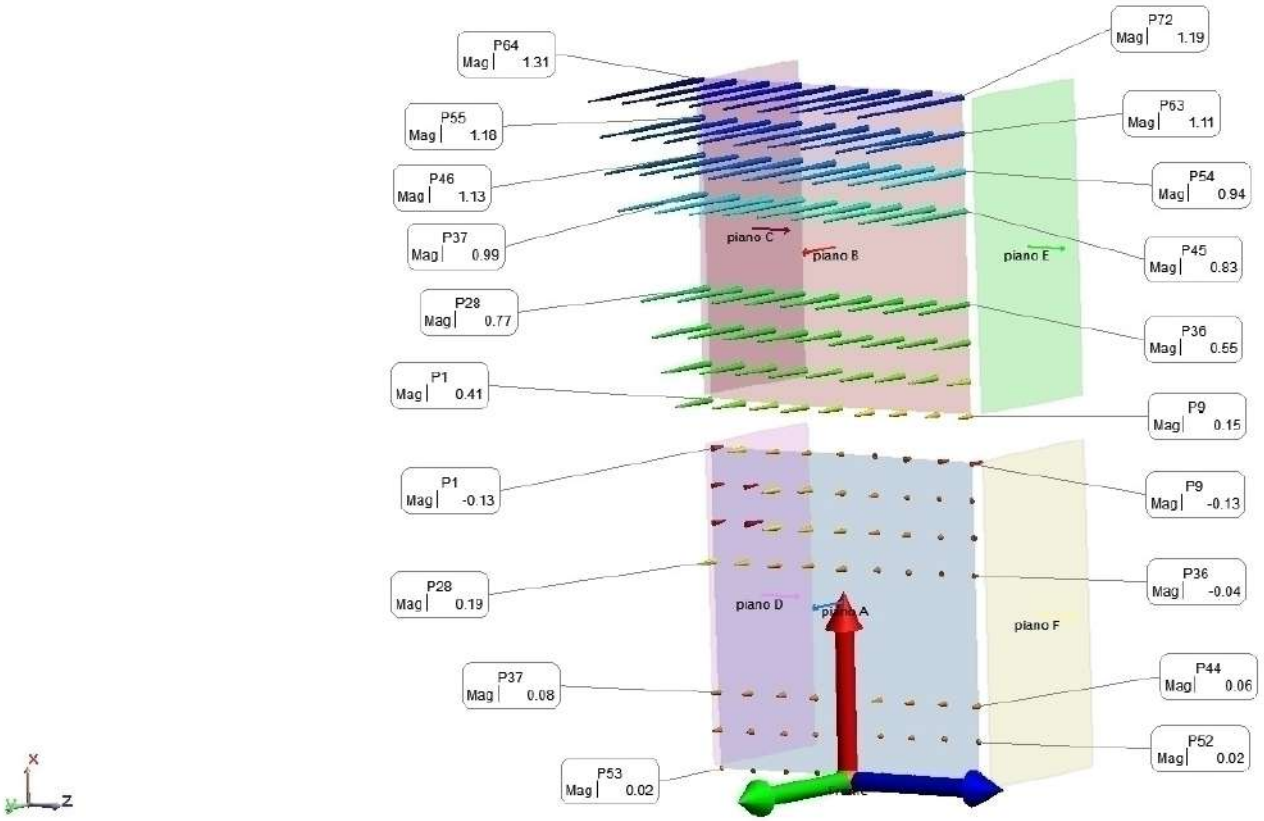

All Vectors Summary: Vector Group 2° controllo 28/05/2013::Scostamento Punti frontali al 2° controllo				
Statistic	dX	dY	dZ	Mag
Min	-0.00	-0.19	-0.00	-0.19
Max	0.00	1.31	0.00	1.31
Average	0.00	0.44	-0.00	0.44
StdDev from Avg	0.00	0.45	0.00	0.45
StdDev from Zero	0.00	0.63	0.00	0.63
RMS	0.00	0.63	0.00	0.63
Count	132			

Scostamento Punti laterali al 3° controllo

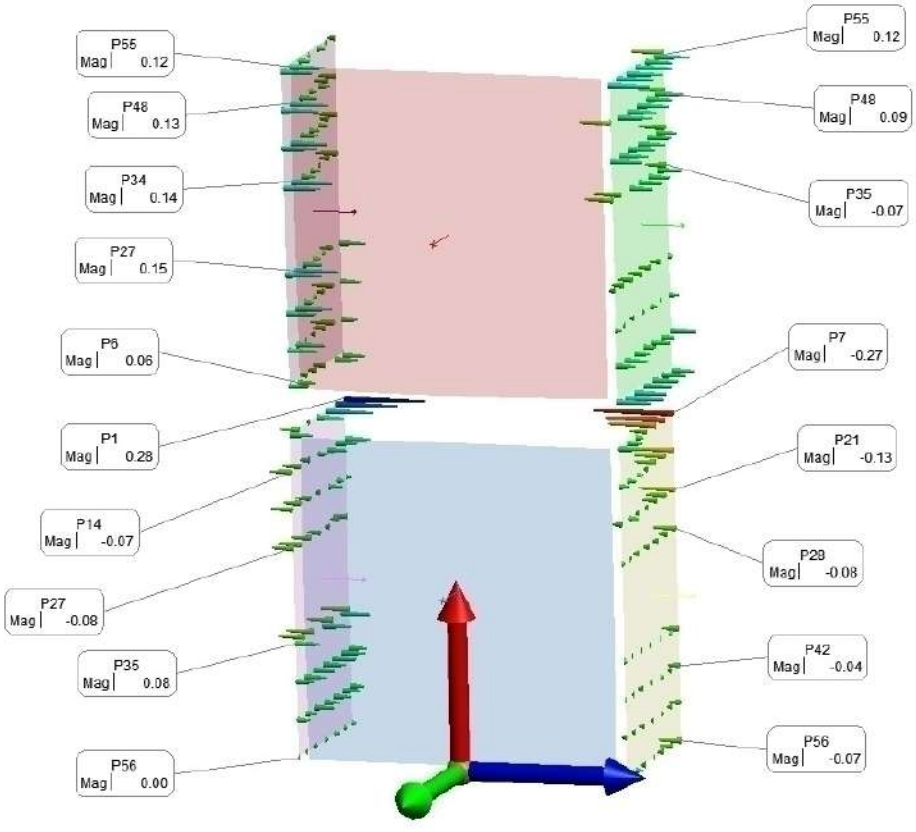

All Vectors Summary: Vector Group 3° controllo 29/05/2013::Scostamento Punti laterali al 3° controllo				
Statistic	dX	dY	dZ	Mag
Min	-0.00	-0.00	-0.27	-0.27
Max	0.00	0.00	0.28	0.28
Average	0.00	-0.00	0.02	0.02
StdDev from Avg	0.00	0.00	0.07	0.07
StdDev from Zero	0.00	0.00	0.07	0.07
RMS	0.00	0.00	0.07	0.07
Count	224			

Scostamento Punti frontali al 3° controllo

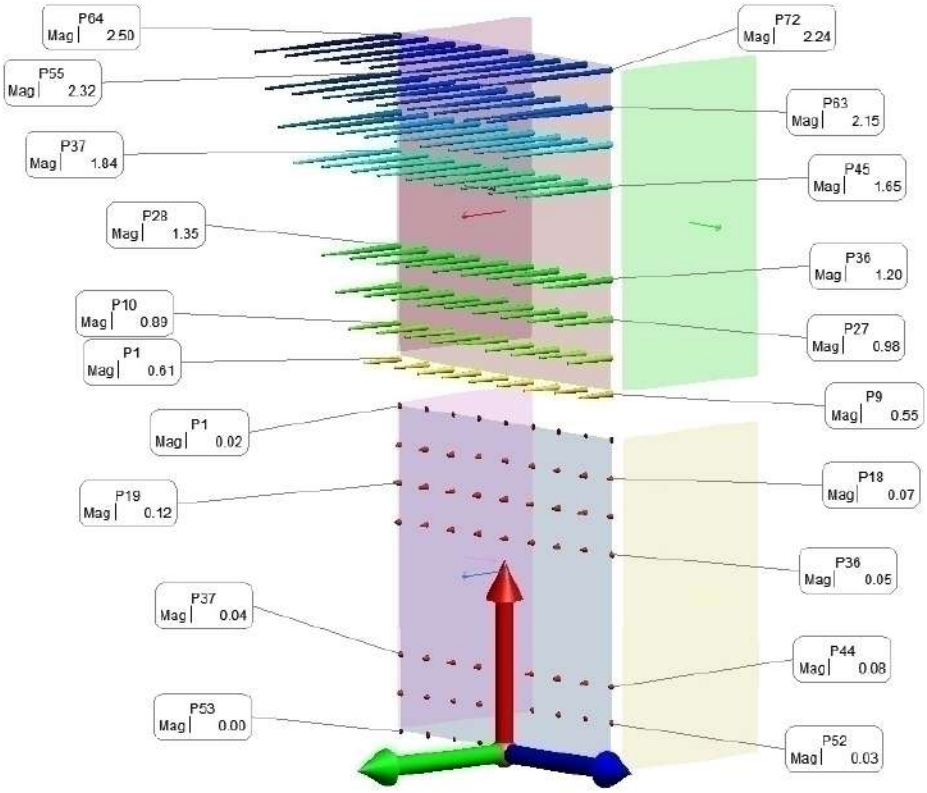

All Vectors Summary: Vector Group 3° controllo 29/05/2013::Scostamento Punti frontali al 3° controllo				
Statistic	dX	dY	dZ	Mag
Min	-0.00	-0.02	-0.00	-0.02
Max	0.00	2.50	0.00	2.50
Average	0.00	0.84	-0.00	0.84
StdDev from Avg	0.00	0.85	0.00	0.85
StdDev from Zero	0.00	1.20	0.00	1.20
RMS	0.00	1.20	0.00	1.20
Count	132			

Scostamento Punti laterali al 4° controllo

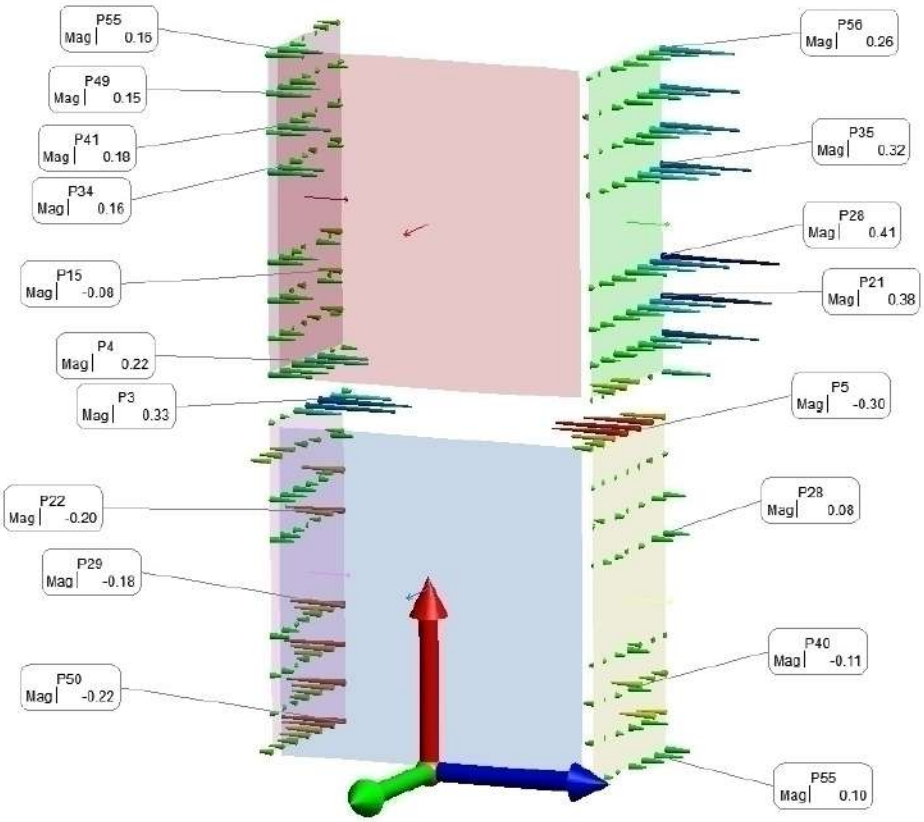

All Vectors Summary: Vector Group 4° controllo 30/05/2013::Scostamento Punti laterali al 4° controllo				
Statistic	dX	dY	dZ	Mag
Min	-0.00	-0.00	-0.30	-0.30
Max	0.00	0.00	0.41	0.41
Average	-0.00	-0.00	0.03	0.03
StdDev from Avg	0.00	0.00	0.11	0.11
StdDev from Zero	0.00	0.00	0.12	0.12
RMS	0.00	0.00	0.12	0.12
Count	224			

Scostamento Punti frontali al 4° controllo

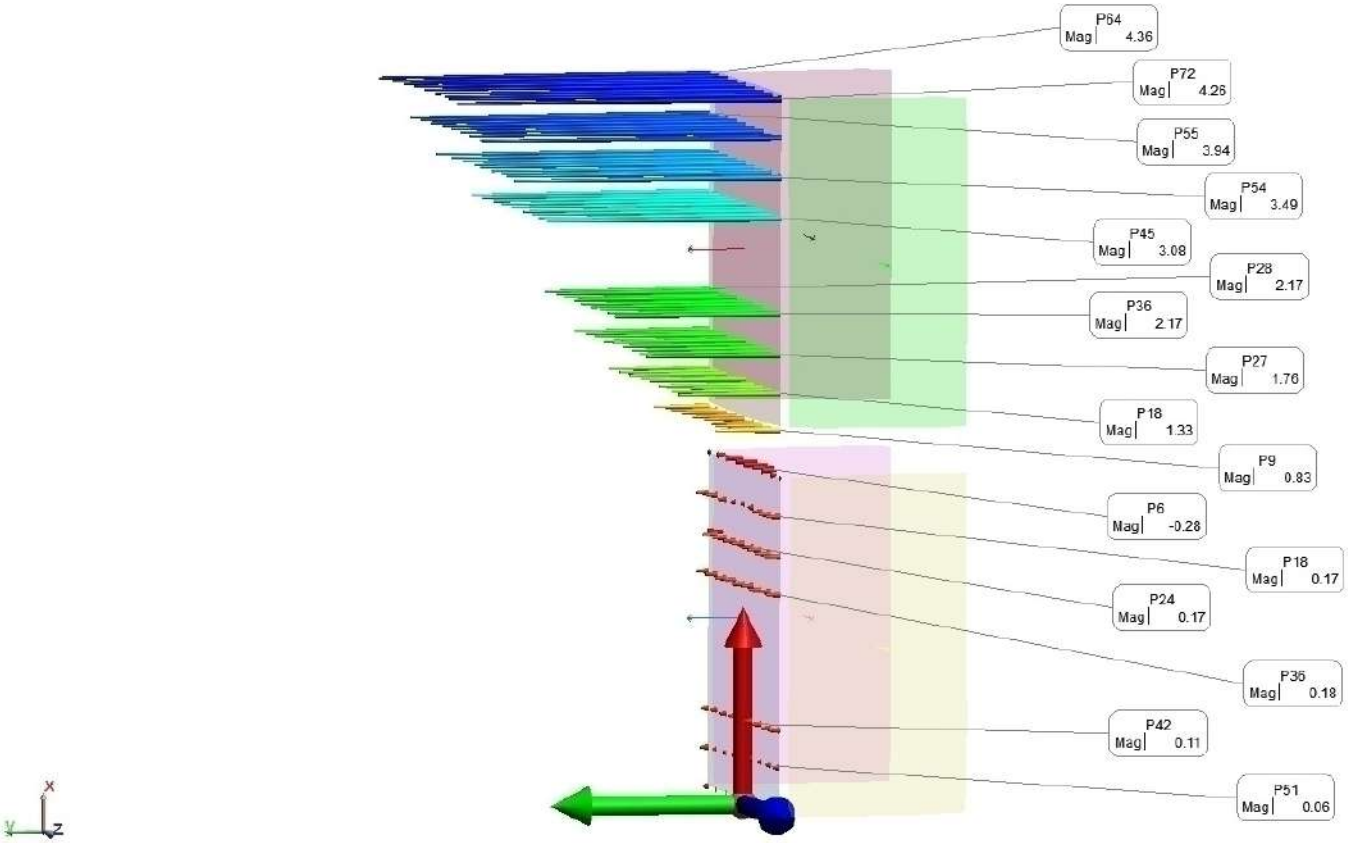

All Vectors Summary: Vector Group 4° controllo 30/05/2013::Scostamento Punti frontali al 4° controllo				
Statistic	dX	dY	dZ	Mag
Min	-0.00	-0.31	-0.00	-0.31
Max	0.00	4.36	0.00	4.36
Average	0.00	1.43	-0.00	1.43
StdDev from Avg	0.00	1.55	0.00	1.55
StdDev from Zero	0.00	2.11	0.00	2.11
RMS	0.00	2.10	0.00	2.10
Count	132			

Scostamento Punti laterali al 5° controllo

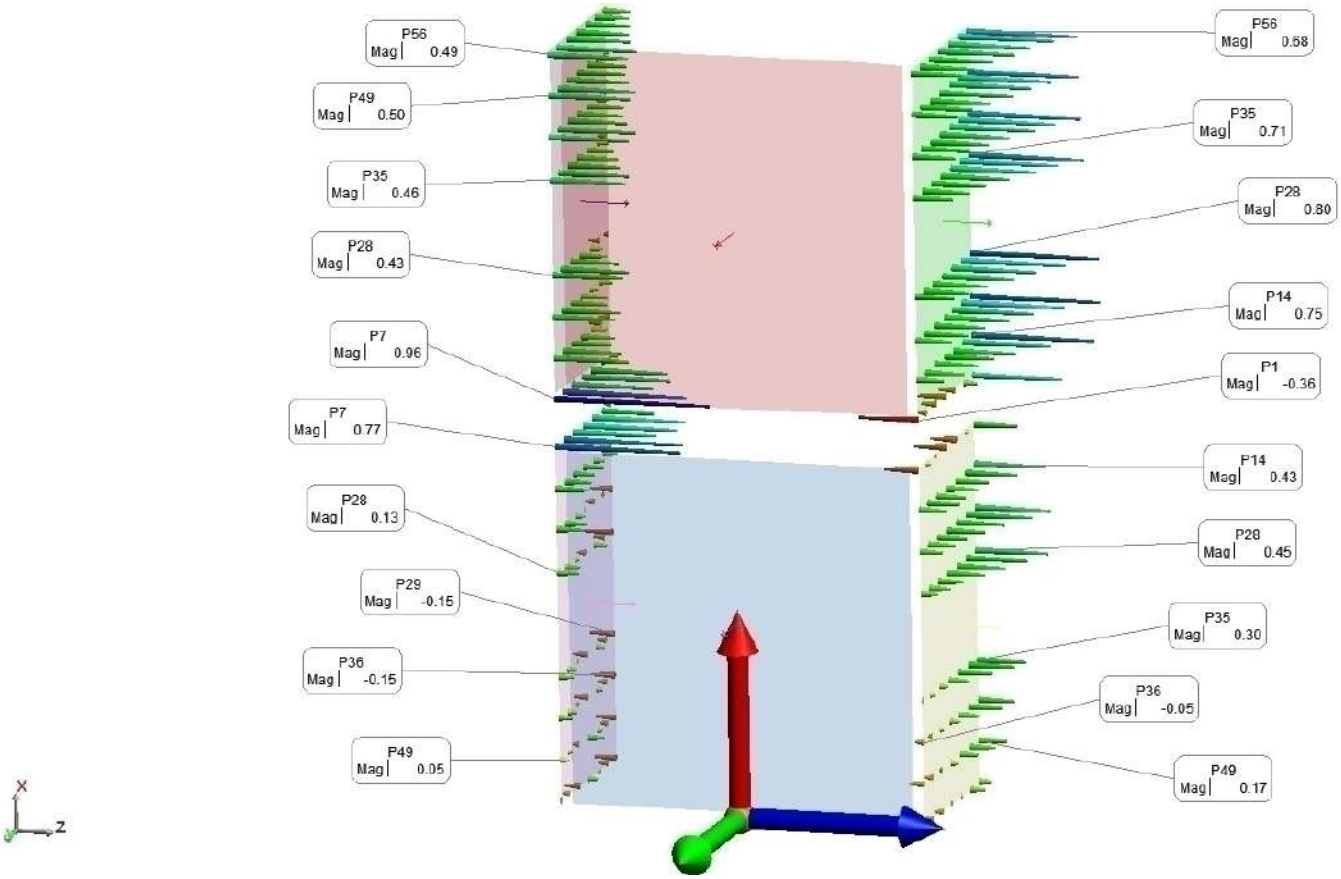

All Vectors Summary: Vector Group 5° controllo 03/06/2013::Scostamento Punti laterali al 5° controllo				
Statistic	dX	dY	dZ	Mag
Min	-0.00	-0.00	-0.36	-0.36
Max	0.00	0.00	0.96	0.96
Average	0.00	-0.00	0.21	0.21
StdDev from Avg	0.00	0.00	0.24	0.24
StdDev from Zero	0.00	0.00	0.32	0.32
RMS	0.00	0.00	0.32	0.32
Count	224			

Scostamento Punti frontali al 5° controllo

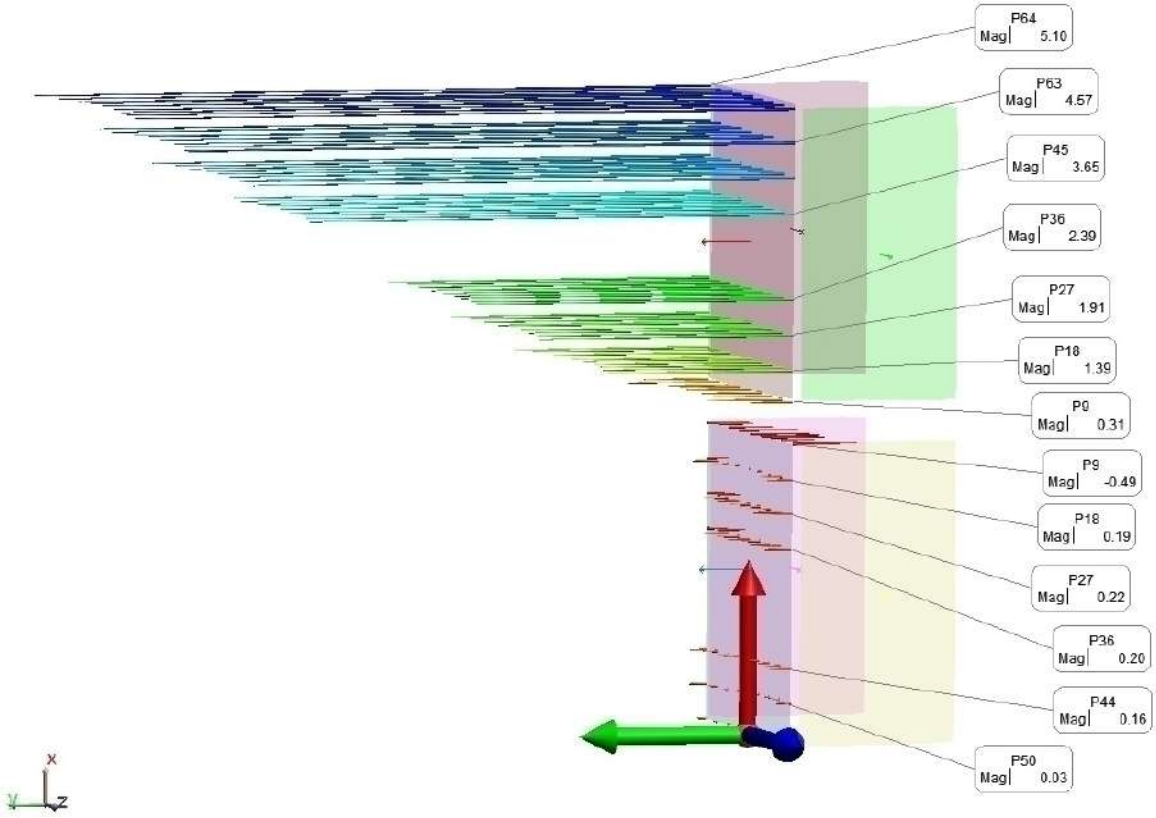

All Vectors Summary: Vector Group 5° controllo 03/06/2013::Scostamento Punti frontali al 5° controllo				
Statistic	dX	dY	dZ	Mag
Min	-0.00	-0.49	-0.00	-0.49
Max	0.00	5.10	0.00	5.10
Average	0.00	1.58	-0.00	1.58
StdDev from Avg	0.00	1.84	0.00	1.84
StdDev from Zero	0.00	2.43	0.00	2.43
RMS	0.00	2.42	0.00	2.42
Count	132			

Distanze REF (1÷10) prima della saldatura e al 5° controllo

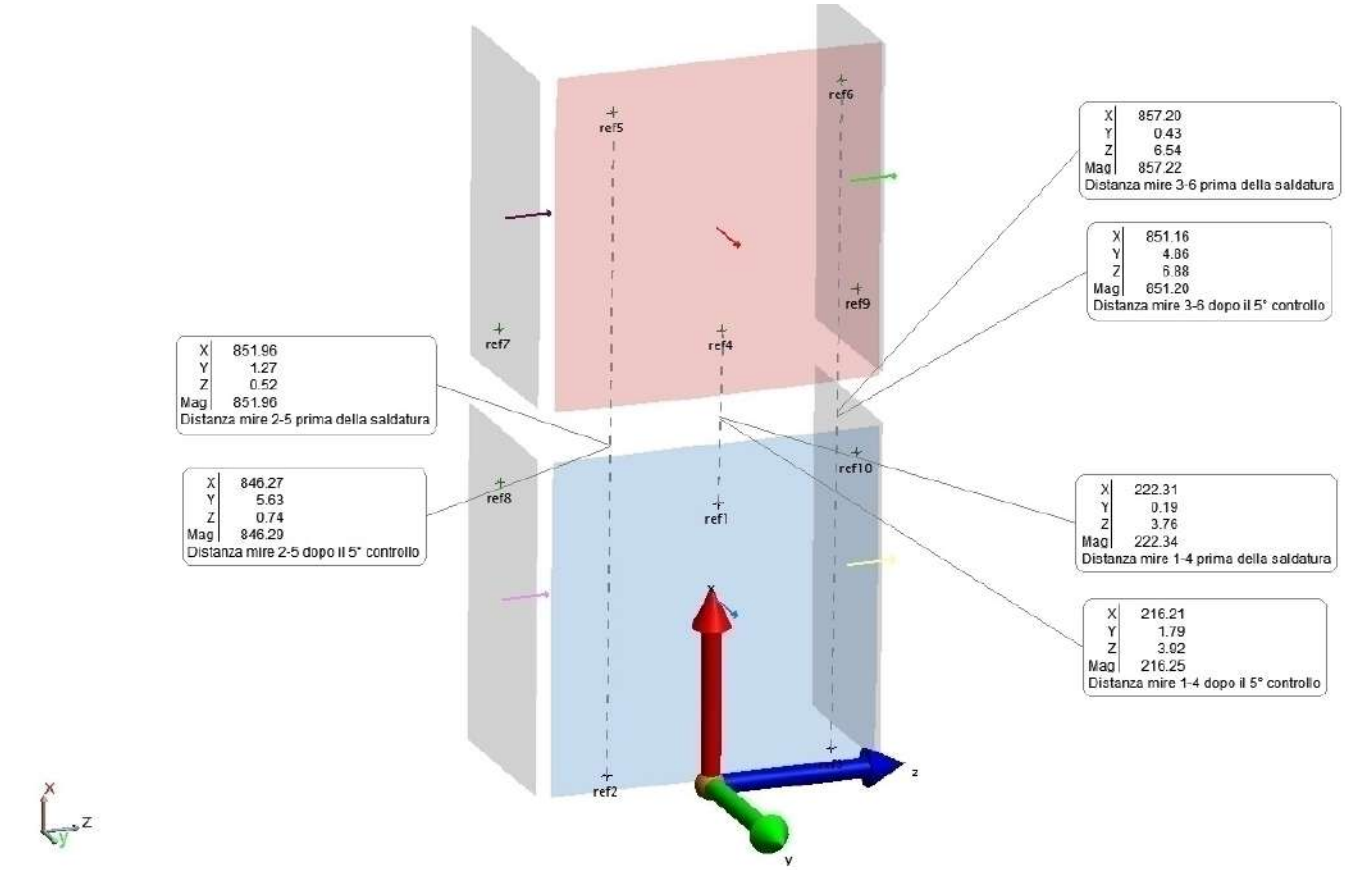

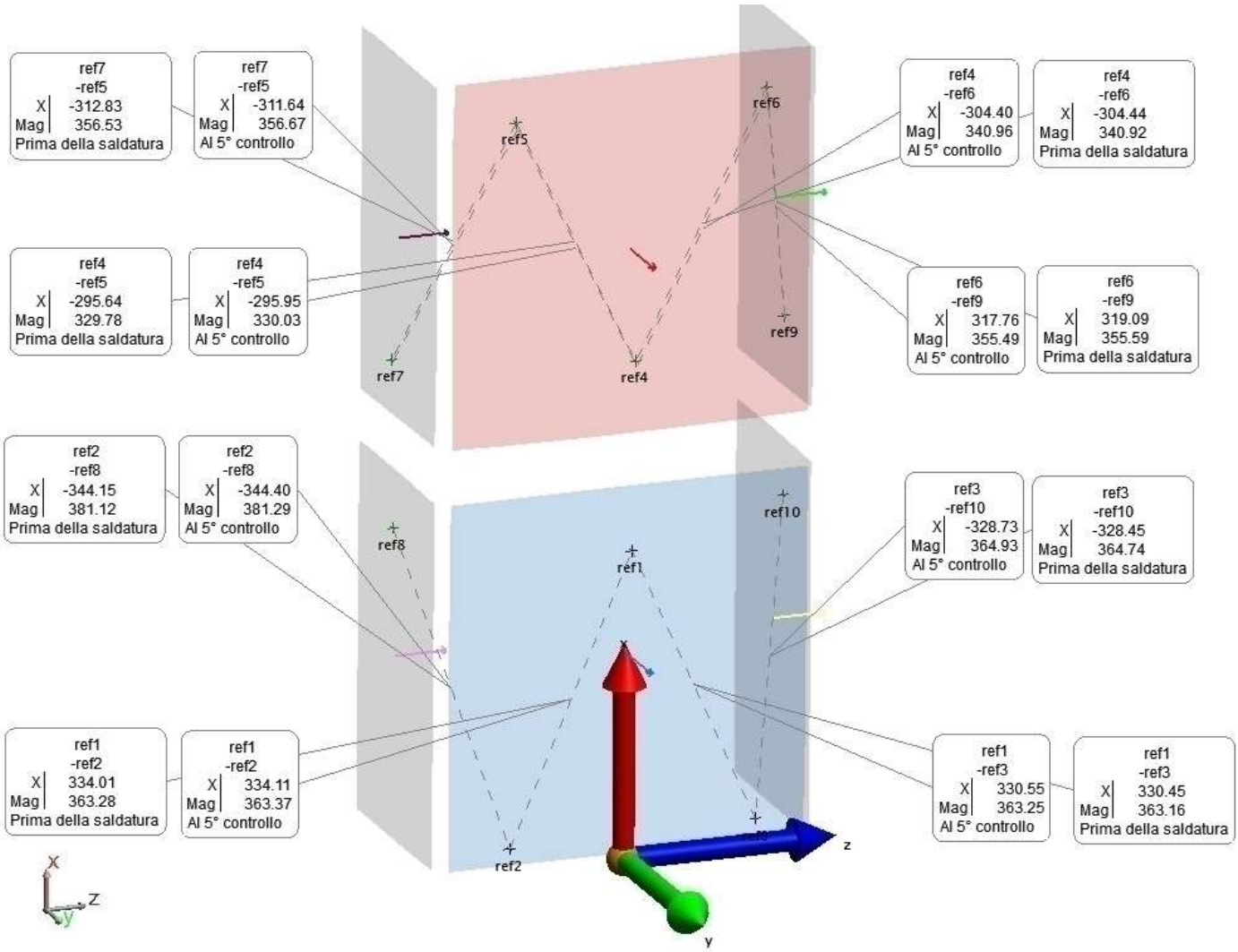

Prima della saldatura: Punti B (Sup.) rispetto Piano A (Inf.) --- Angolo tra Piano A (Inf.) e Piano B (Sup.)

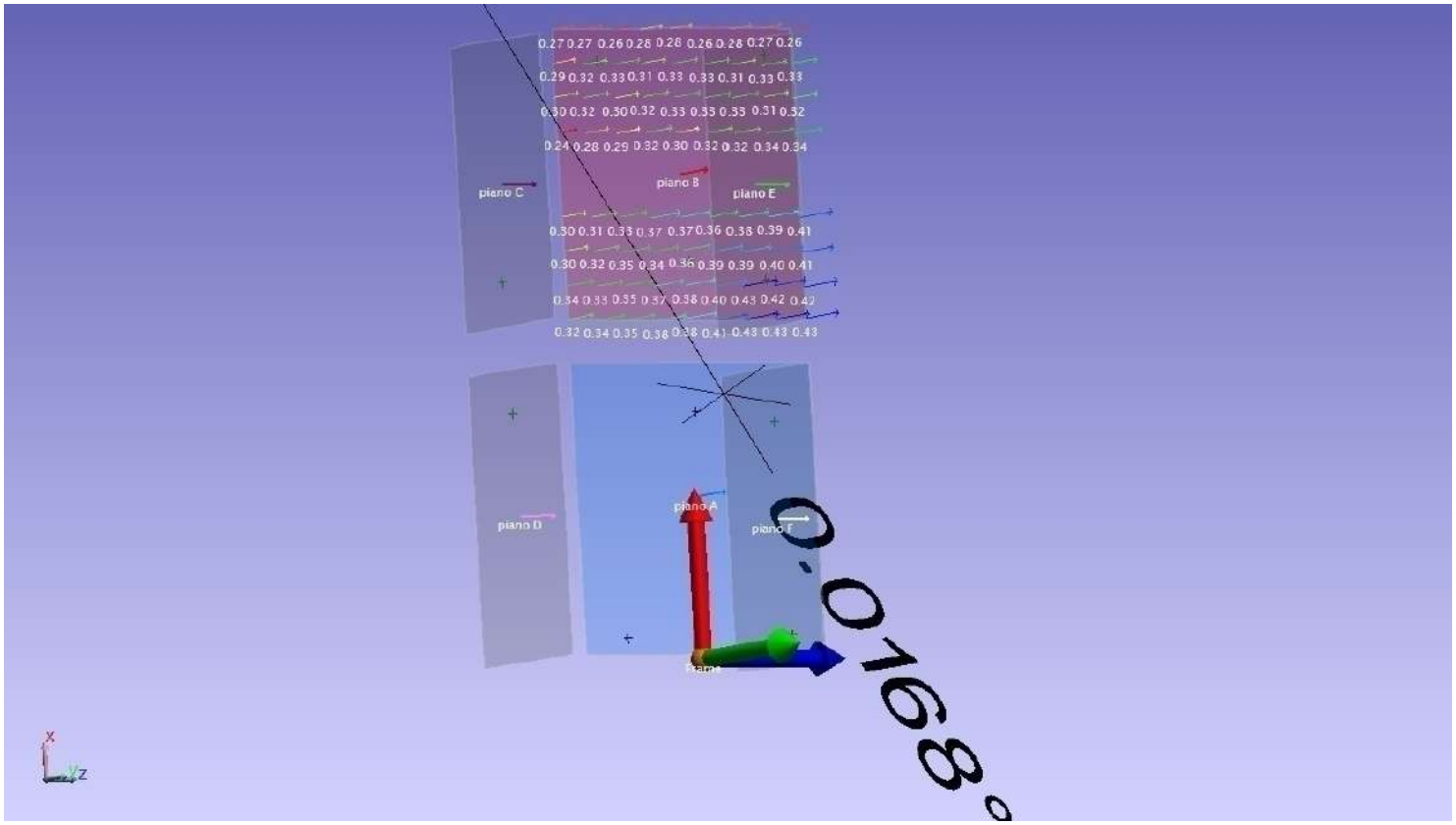

Dopo saldatura: Angolo tra Piano A (Inf.) e Piano B (Sup.)

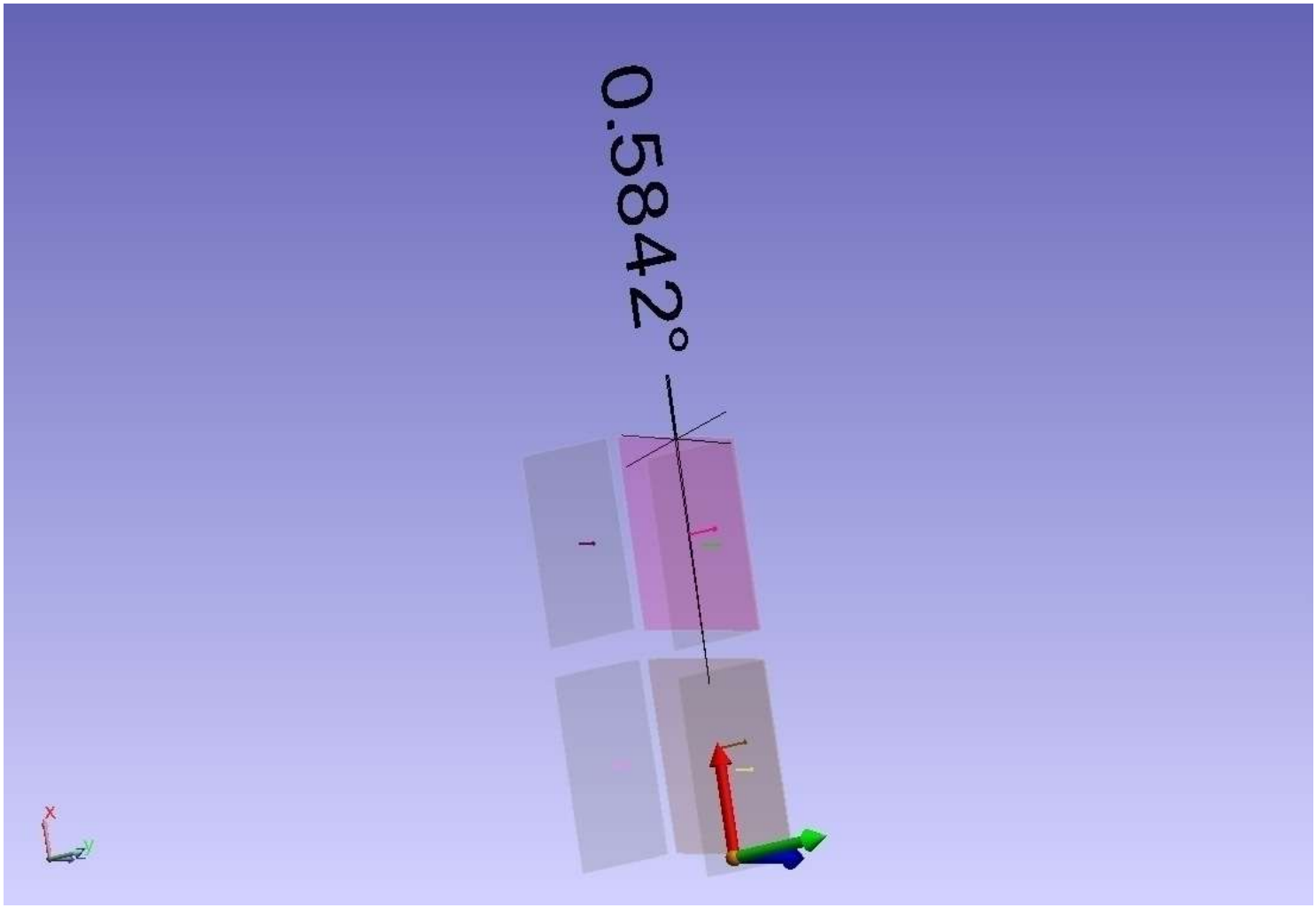

SALDATURA LONGITUDINALE

Nomi riferimenti

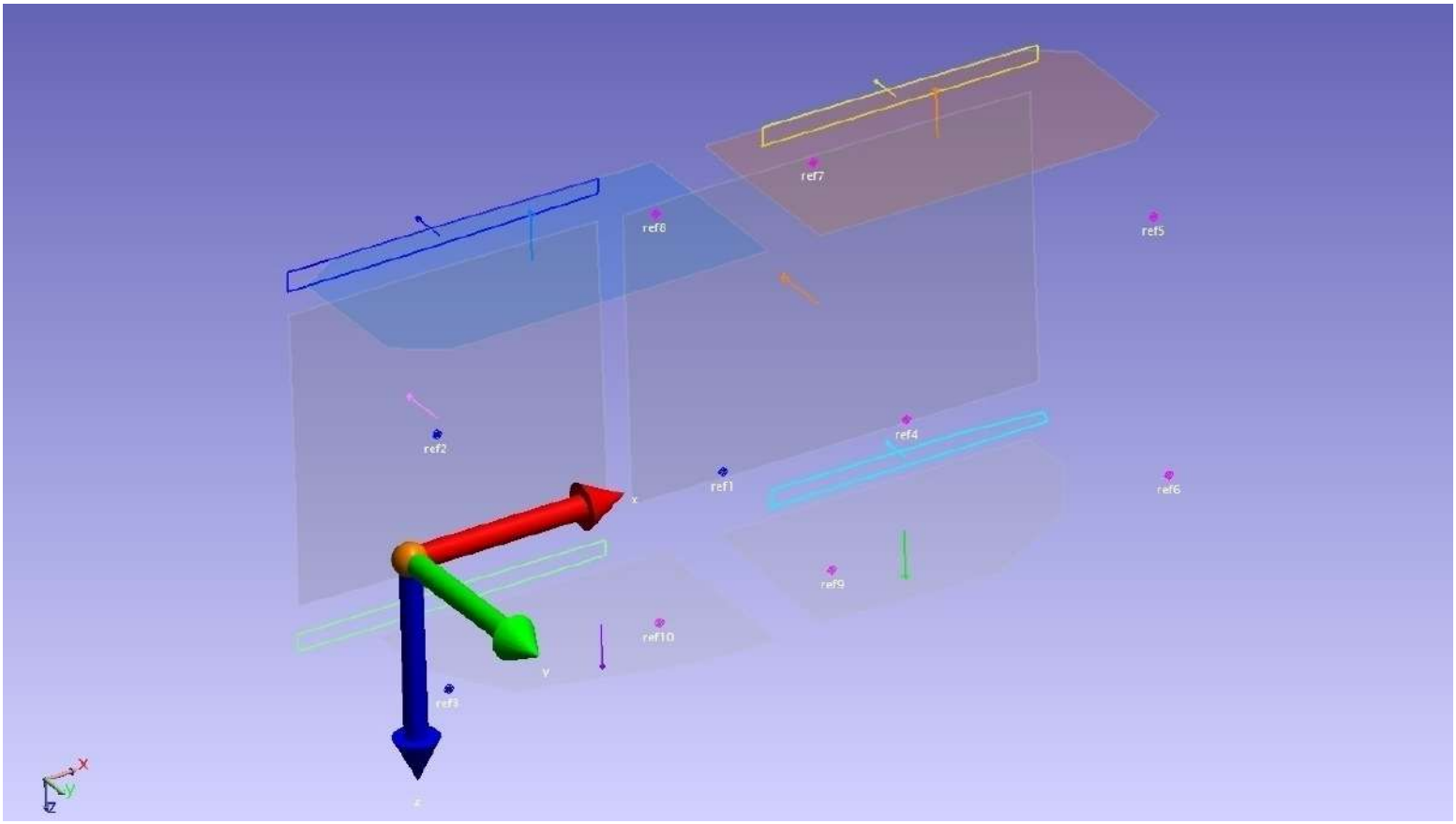

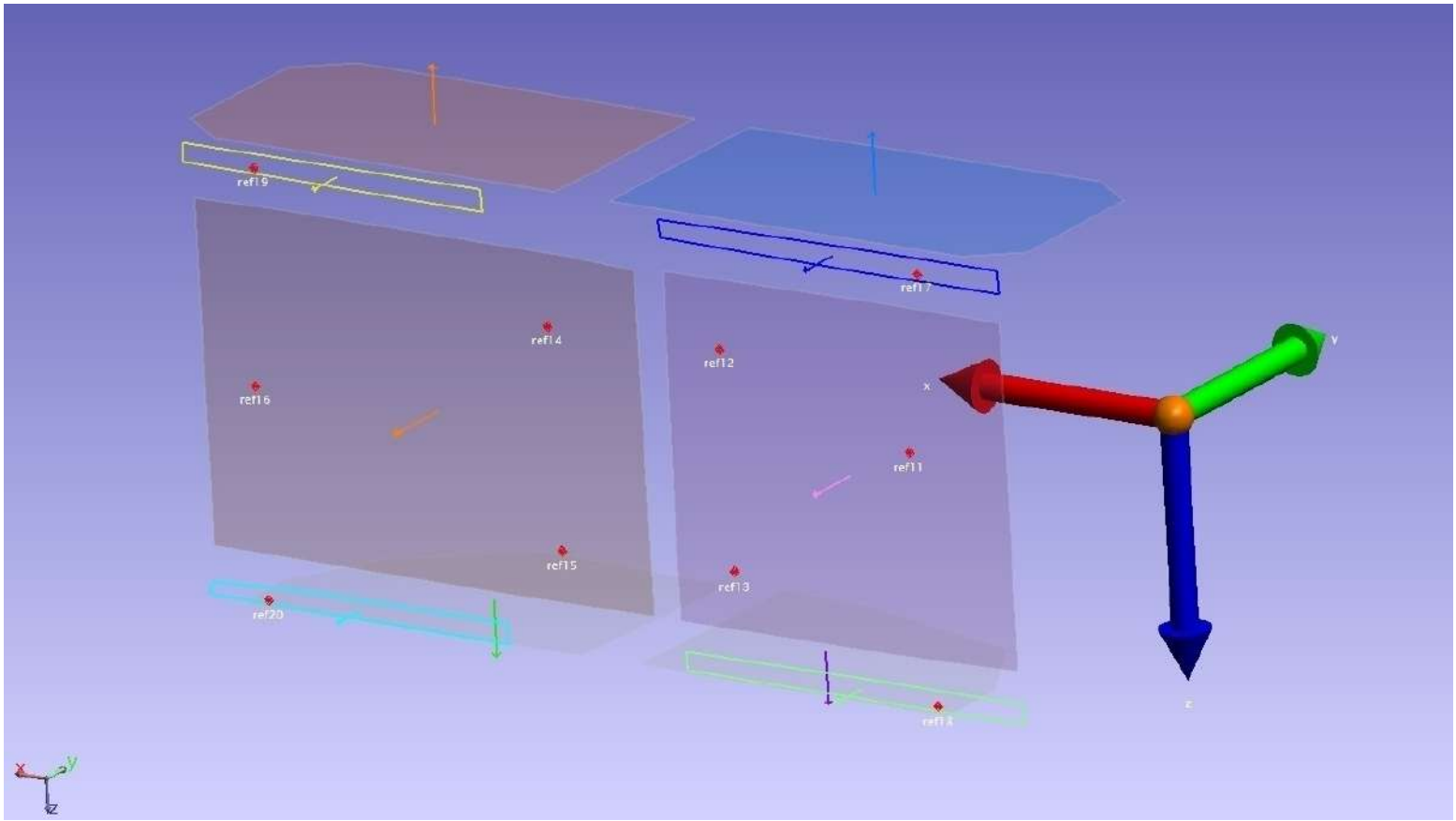

CONTROLLI DURANTE SALDATURA MOCK-UP

SCOSTAMENTO REF 1,2,3 AD OGNI ALLINEAMENTO

All Vectors Summary: Vector Group
7° controllo 07/06/2013 coperchi::Allineamento REF 7° controllo

Statistic	dX	dY	dZ	Mag
Min	-0.07	-0.00	-0.04	0.04
Max	0.04	0.00	0.03	0.07
Average	-0.00	0.00	0.00	0.06
StdDev from Avg	0.06	0.00	0.03	0.02
StdDev from Zero	0.06	0.00	0.03	0.07
RMS	0.05	0.00	0.03	0.06
Count	3			

Vector Group
7° controllo 07/06/2013 coperchi::Allineamento REF 7° controllo

Name	Delta dX	dY	dZ	Mag
ref1	-0.07	-0.00	0.01	0.07
ref2	0.03	0.00	0.03	0.04
ref3	0.04	0.00	-0.04	0.06

All Vectors Summary: Vector Group
8° controllo 10/06/2013 coperchi::Allineamento REF 8° controllo

Statistic	dX	dY	dZ	Mag
Min	-0.09	-0.00	-0.09	0.09
Max	0.06	0.00	0.08	0.11
Average	-0.00	0.00	0.00	0.09
StdDev from Avg	0.08	0.00	0.09	0.01
StdDev from Zero	0.08	0.00	0.09	0.12
RMS	0.06	0.00	0.07	0.10
Count	3			

Vector Group
8° controllo 10/06/2013 coperchi::Allineamento REF 8° controllo

Name	Delta dX	dY	dZ	Mag
ref1	-0.09	-0.00	0.01	0.09
ref2	0.03	-0.00	0.08	0.09
ref3	0.06	0.00	-0.09	0.11

All Vectors Summary: Vector Group
9° controllo 10/06/2013 coperchi::Allineamento REF 9° controllo

Statistic	dX	dY	dZ	Mag
Min	-0.08	-0.00	-0.13	0.08
Max	0.07	0.00	0.15	0.16
Average	0.00	0.00	0.00	0.13
StdDev from Avg	0.07	0.00	0.14	0.04
StdDev from Zero	0.07	0.00	0.14	0.16
RMS	0.06	0.00	0.12	0.13
Count	3			

Vector Group
9° controllo 10/06/2013 coperchi::Allineamento REF 9° controllo

Name	Delta dX	dY	dZ	Mag
ref1	-0.08	-0.00	-0.02	0.08
ref2	0.07	0.00	0.15	0.16
ref3	0.01	0.00	-0.13	0.13

All Vectors Summary: Vector Group
10° controllo 11/06/2013 coperchi::Allineamento REF 10° controllo

Statistic	dX	dY	dZ	Mag
Min	-0.10	-0.00	-0.24	0.10
Max	0.06	0.00	0.24	0.24
Average	0.00	0.00	0.00	0.19
StdDev from Avg	0.09	0.00	0.24	0.08
StdDev from Zero	0.09	0.00	0.24	0.25
RMS	0.07	0.00	0.19	0.21
Count	3			

Vector Group
10° controllo 11/06/2013 coperchi::Allineamento REF 10° controllo

Name	Delta dX	dY	dZ	Mag
ref1	-0.10	-0.00	-0.00	0.10
ref2	0.06	-0.00	0.24	0.24
ref3	0.05	0.00	-0.24	0.24

All Vectors Summary: Vector Group
11° controllo 12/06/2013 coperchi::Allineamento REF 11° controllo

Statistic	dX	dY	dZ	Mag
Min	-0.16	-0.00	-0.32	0.16
Max	0.08	0.00	0.31	0.33
Average	0.00	0.00	0.00	0.27
StdDev from Avg	0.14	0.00	0.32	0.10
StdDev from Zero	0.14	0.00	0.32	0.34
RMS	0.11	0.00	0.26	0.28
Count	3			

Vector Group
11° controllo 12/06/2013 coperchi::Allineamento REF 11° controllo

Name	Delta dX	dY	dZ	Mag
ref1	-0.16	-0.00	0.01	0.16
ref2	0.07	-0.00	0.31	0.32
ref3	0.08	0.00	-0.32	0.33

Scostamento REF11 ÷ REF20 al 7° controllo (PUNTATURA)

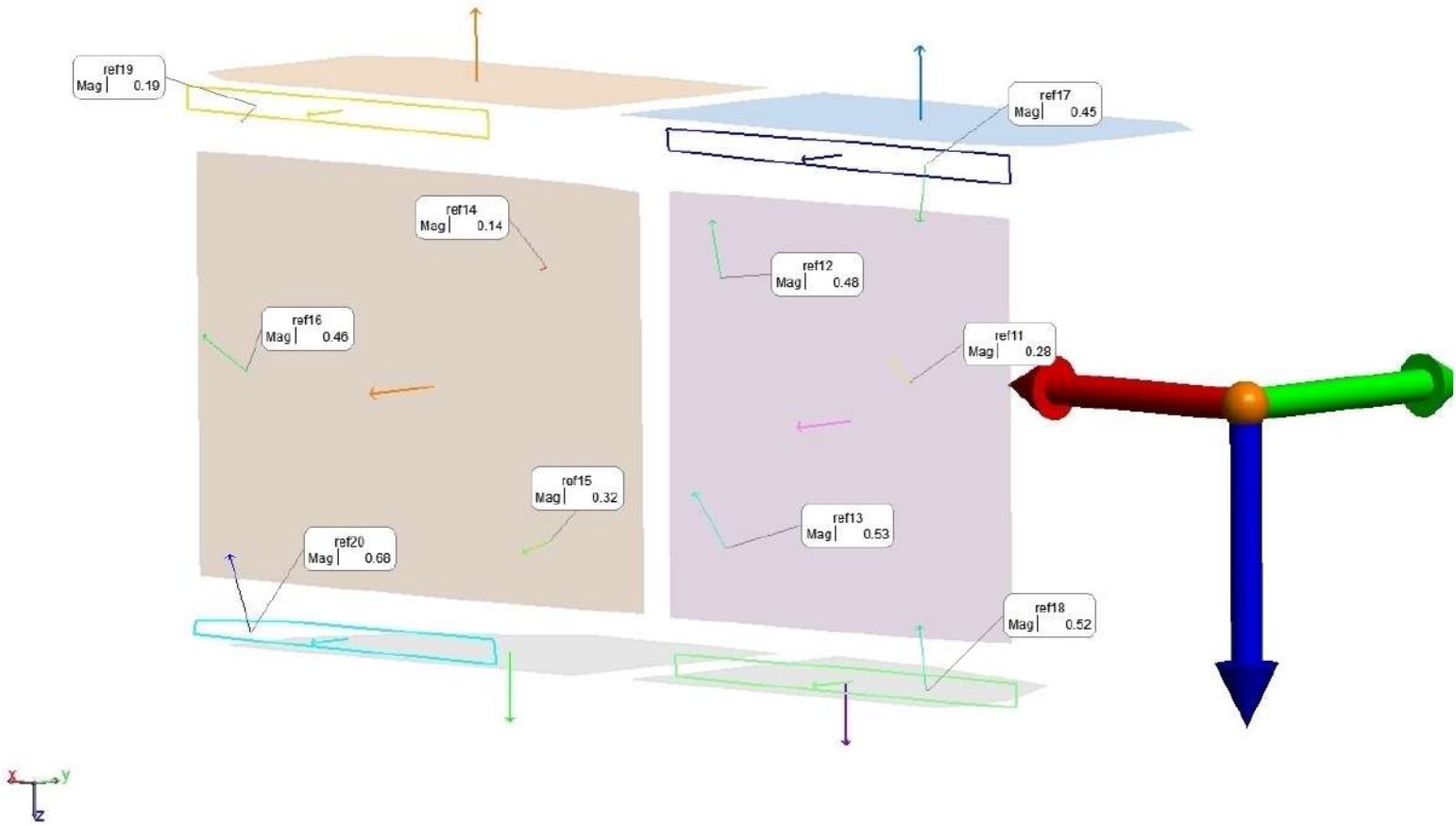

All Vectors Summary: Vector Group 7° controllo 07/06/2013 coperchi::REF2-REF2 al 7° controllo				
Statistic	dX	dY	dZ	Mag
Min	0.01	-0.28	-0.64	0.14
Max	0.34	0.11	0.45	0.68
Average	0.15	-0.06	-0.18	0.41
StdDev from Avg	0.13	0.13	0.34	0.17
StdDev from Zero	0.20	0.14	0.39	0.46
RMS	0.19	0.14	0.37	0.44
Count	10			

Vector Group 7° controllo 07/06/2013 coperchi::REF2-REF2 al 7° controllo				
Name	Delta			
	dX	dY	dZ	Mag
ref11	0.22	0.06	-0.16	0.28
ref12	0.19	0.11	-0.43	0.48
ref13	0.34	0.01	-0.42	0.53
ref14	0.12	0.05	0.04	0.14
ref15	0.30	0.01	0.11	0.32
ref16	0.21	-0.28	-0.30	0.46
ref17	0.02	-0.06	0.45	0.45
ref18	0.02	-0.06	-0.52	0.52
ref19	0.02	-0.16	0.11	0.19
ref20	0.01	-0.23	-0.64	0.68

Scostamento REF11 ÷ REF20 all' 8° controllo (TERMINE 1a PASSATA TIG)

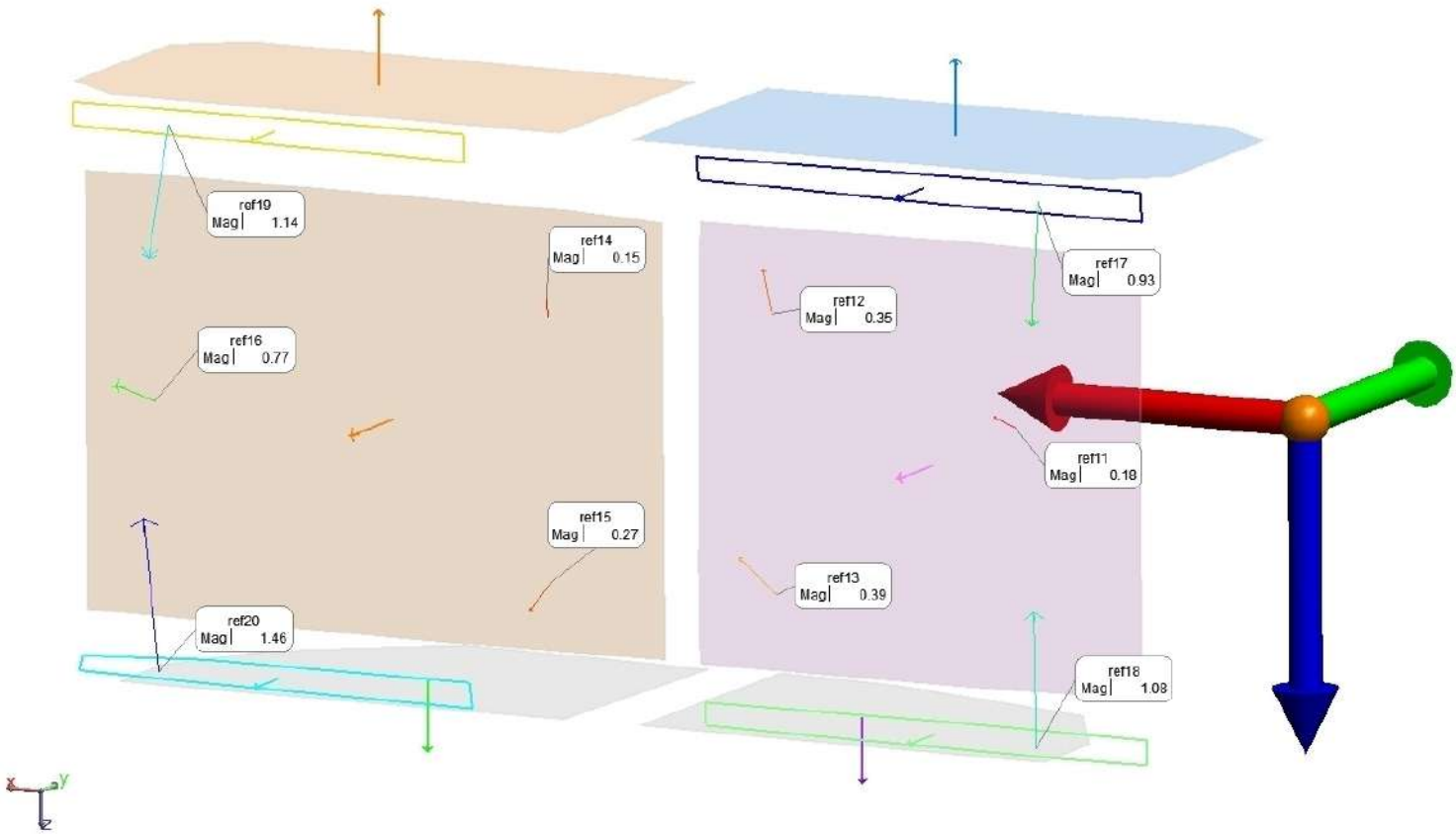

All Vectors Summary: Vector Group 8° controllo 10/06/2013 coperchi::REF2-REF2 all'8° controllo				
Statistic	dX	dY	dZ	Mag
Min	-0.19	-0.73	-1.29	0.15
Max	0.27	-0.02	0.92	1.46
Average	0.01	-0.27	-0.12	0.67
StdDev from Avg	0.15	0.30	0.71	0.46
StdDev from Zero	0.15	0.41	0.72	0.85
RMS	0.14	0.39	0.69	0.80
Count	10			

Vector Group 8° controllo 10/06/2013 coperchi::REF2-REF2 all'8° controllo					
Name	Delta				
	dX	dY	dZ	Mag	
ref11	0.14	-0.07	-0.08	0.18	
ref12	0.06	-0.02	-0.34	0.35	
ref13	0.27	-0.09	-0.27	0.39	
ref14	-0.05	-0.07	0.12	0.15	
ref15	0.16	-0.02	0.22	0.27	
ref16	-0.03	-0.73	-0.25	0.77	+
ref17	-0.02	-0.16	0.92	0.93	+
ref18	-0.06	-0.17	-1.06	1.08	+
ref19	-0.17	-0.71	0.87	1.14	+
ref20	-0.19	-0.65	-1.29	1.46	+

Scostamento REF11 ÷ REF20 al 9° controllo (TERMINE 2a PASSATA TIG)

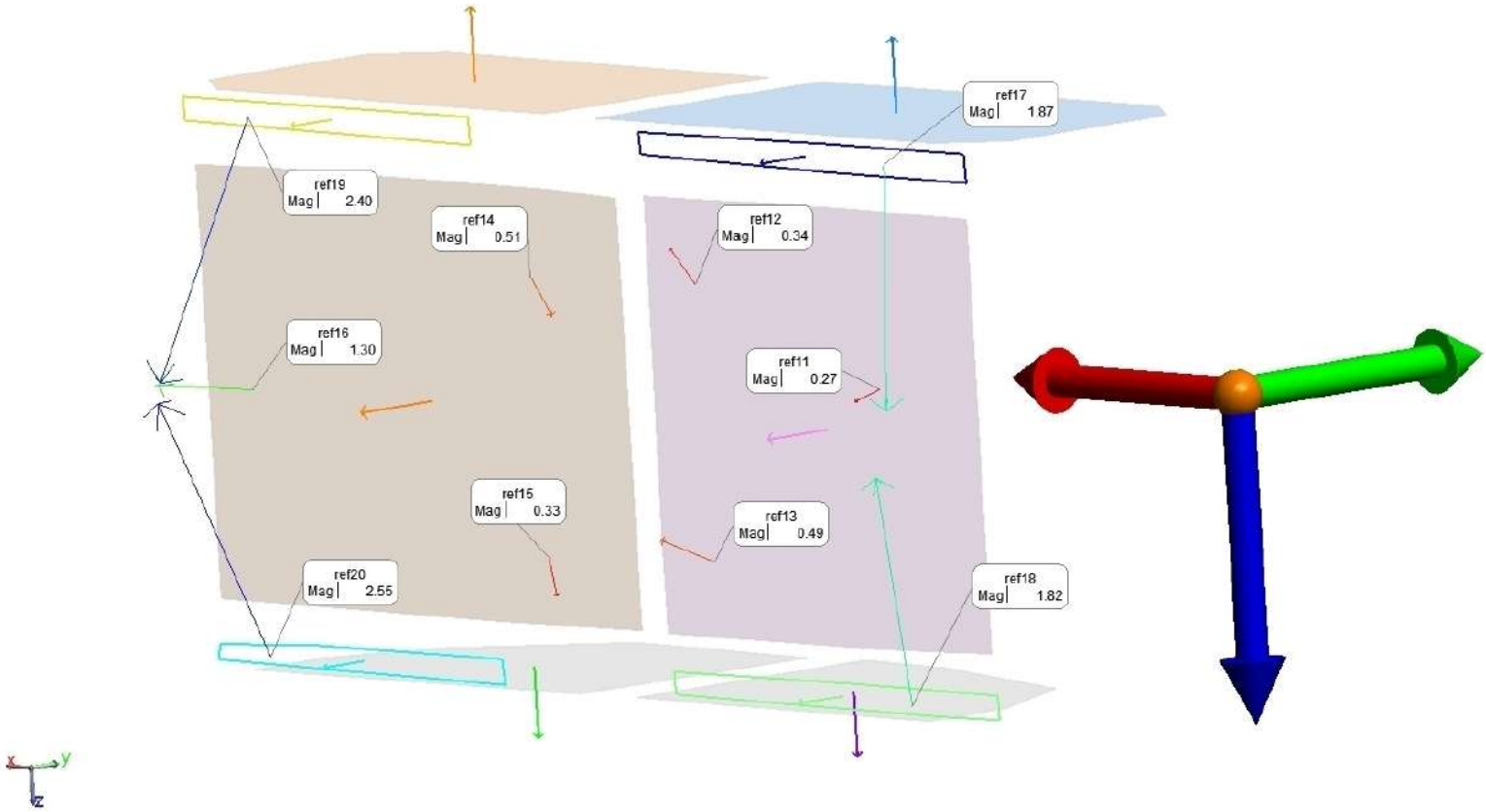

All Vectors Summary: Vector Group 9° controllo 10/06/2013 coperchi::REF2-REF2 al 9° controllo				
Statistic	dX	dY	dZ	Mag
Min	-0.46	-1.47	-2.13	0.27
Max	0.44	-0.03	1.85	2.55
Average	-0.11	-0.51	-0.03	1.19
StdDev from Avg	0.30	0.59	1.28	0.91
StdDev from Zero	0.33	0.80	1.28	1.55
RMS	0.31	0.76	1.22	1.47
Count	10			

Vector Group 9° controllo 10/06/2013 coperchi::REF2-REF2 al 9° controllo					
Name	Delta				
	dX	dY	dZ	Mag	
ref11	0.24	-0.03	0.10	0.27	
ref12	0.17	-0.08	-0.28	0.34	
ref13	0.44	-0.14	-0.16	0.49	
ref14	-0.41	-0.17	0.25	0.51	
ref15	-0.15	-0.08	0.28	0.33	
ref16	-0.32	-1.25	-0.21	1.30	+
ref17	-0.13	-0.24	1.85	1.87	+
ref18	-0.09	-0.33	-1.79	1.82	+
ref19	-0.46	-1.47	1.84	2.40	+
ref20	-0.37	-1.34	-2.13	2.55	+

Scostamento REF11 ÷ REF20 al 10° controllo (META' SPESSORE A FILO)

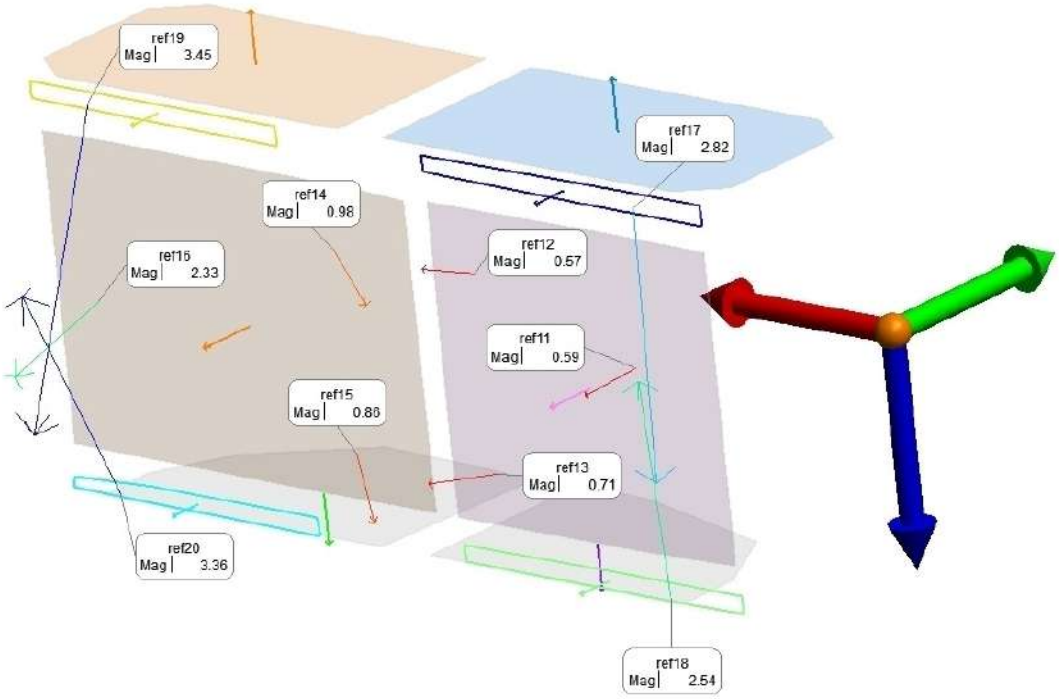

All Vectors Summary: Vector Group 10° controllo 11/06/2013 coperchi::REF2-REF2 al 10° controllo				
Statistic	dX	dY	dZ	Mag
Min	-0.79	-2.20	-2.77	0.57
Max	0.54	-0.30	2.80	3.45
Average	-0.24	-0.89	0.13	1.82
StdDev from Avg	0.49	0.77	1.82	1.19
StdDev from Zero	0.56	1.21	1.82	2.26
RMS	0.53	1.15	1.73	2.14
Count	10			

Vector Group 10° controllo 11/06/2013 coperchi::REF2-REF2 al 10° controllo					
Name	Delta				
	dX	dY	dZ	Mag	
ref11	0.42	-0.33	0.25	0.59	
ref12	0.29	-0.46	-0.16	0.57	
ref13	0.54	-0.45	0.04	0.71	
ref14	-0.79	-0.49	0.31	0.98	+
ref15	-0.53	-0.44	0.51	0.86	+
ref16	-0.75	-2.20	-0.03	2.33	+
ref17	-0.21	-0.30	2.80	2.82	+
ref18	-0.26	-0.45	-2.48	2.54	+
ref19	-0.59	-1.96	2.78	3.45	+
ref20	-0.57	-1.81	-2.77	3.36	+

Scostamento REF11 ÷ REF20 al 11° controllo (TERMINE SPESSORE A FILO)

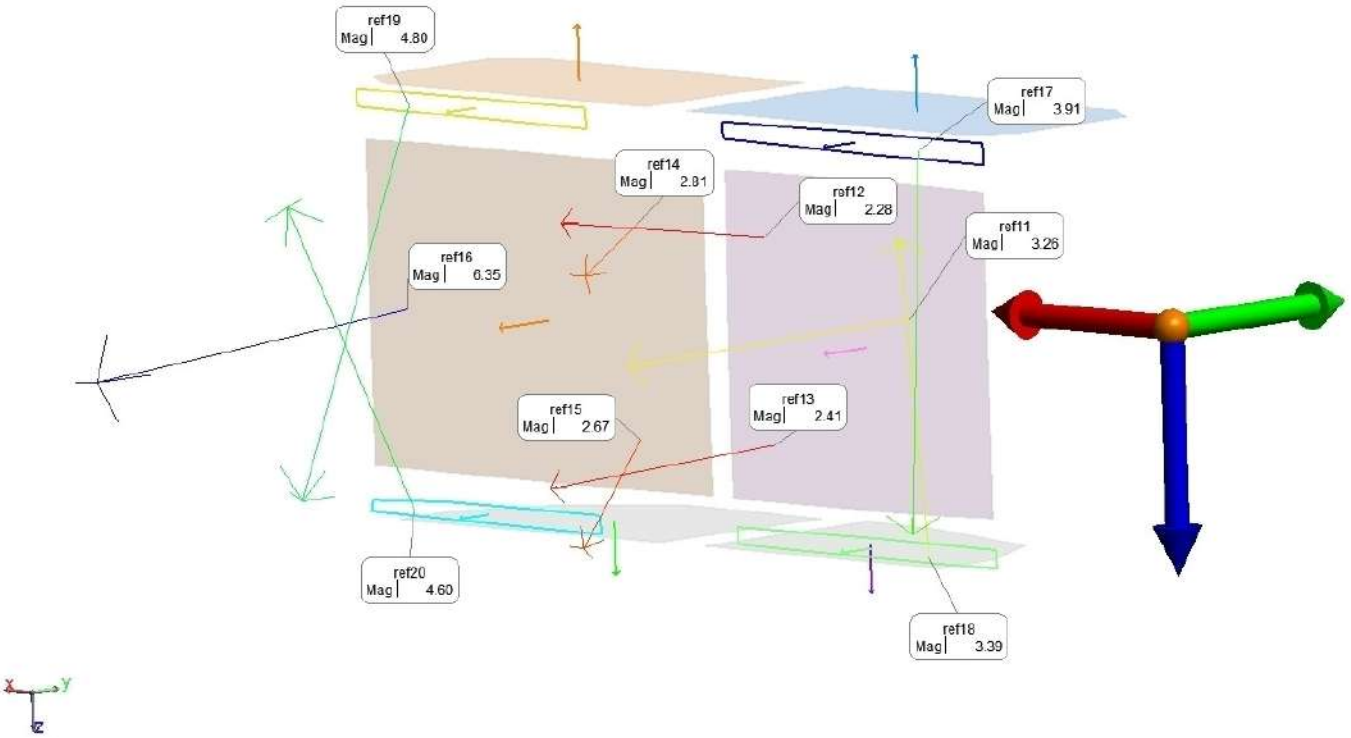

All Vectors Summary: Vector Group 11° controllo 12/06/2013 coperchi::REF2-REF2 all'11° controllo				
Statistic	dX	dY	dZ	Mag
Min	-1.57	-6.15	-3.47	2.28
Max	1.11	-0.60	3.83	6.35
Average	-0.44	-2.50	0.18	3.65
StdDev from Avg	1.06	1.54	2.40	1.29
StdDev from Zero	1.16	3.05	2.41	4.05
RMS	1.10	2.89	2.28	3.85
Count	10			

Vector Group 11° controllo 12/06/2013 coperchi::REF2-REF2 all'11° controllo					
Name	Delta				
	dX	dY	dZ	Mag	
ref11	0.97	-3.11	0.21	3.26	+
ref12	0.83	-2.10	-0.31	2.28	+
ref13	1.11	-2.12	0.28	2.41	+
ref14	-1.57	-2.33	0.13	2.81	+
ref15	-1.29	-2.20	0.79	2.67	+
ref16	-1.56	-6.15	-0.02	6.35	+
ref17	-0.39	-0.65	3.83	3.91	+
ref18	-0.30	-0.60	-3.33	3.39	+
ref19	-1.13	-2.89	3.67	4.80	+
ref20	-1.06	-2.82	-3.47	4.60	+

Scostamento Punti laterali al 7° controllo

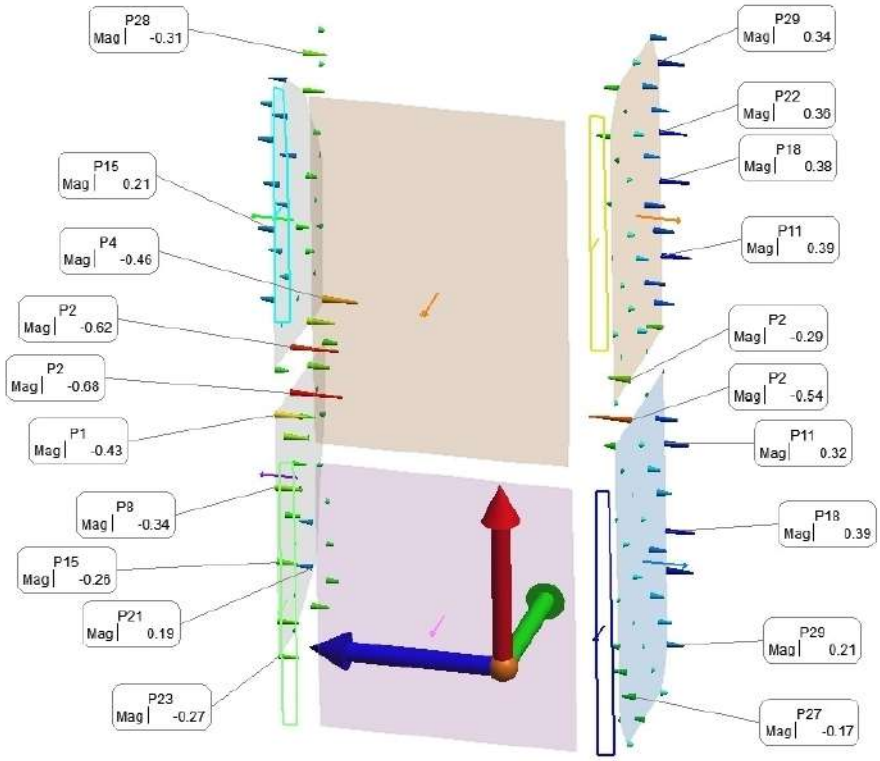

All Vectors Summary: Vector Group 7° controllo 07/06/2013 coperchi::Scostamento Punti laterali al 7° controllo				
Statistic	dX	dY	dZ	Mag
Min	-0.00	-0.00	-0.68	-0.68
Max	0.00	0.00	0.54	0.39
Average	0.00	0.00	-0.08	0.00
StdDev from Avg	0.00	0.00	0.20	0.21
StdDev from Zero	0.00	0.00	0.21	0.21
RMS	0.00	0.00	0.21	0.21
Count	119			

Scostamento Punti frontali al 7° controllo

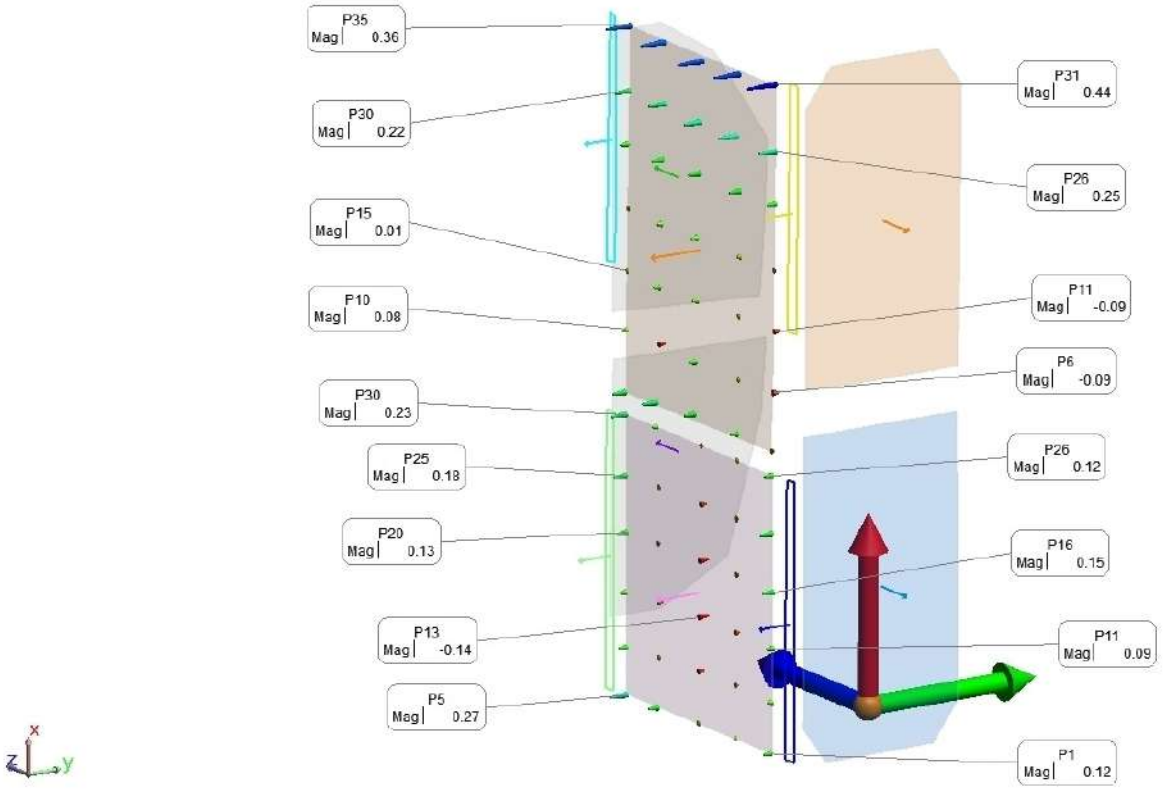

All Vectors Summary: Vector Group 7° controllo 07/06/2013 coperchi::Scostamento Punti frontali al 7° controllo				
Statistic	dX	dY	dZ	Mag
Min	-0.00	-0.44	-0.00	-0.14
Max	0.00	0.14	0.00	0.44
Average	0.00	-0.09	-0.00	0.09
StdDev from Avg	0.00	0.13	0.00	0.13
StdDev from Zero	0.00	0.16	0.00	0.16
RMS	0.00	0.16	0.00	0.16
Count	65			

Scostamento Punti laterali al 8° controllo

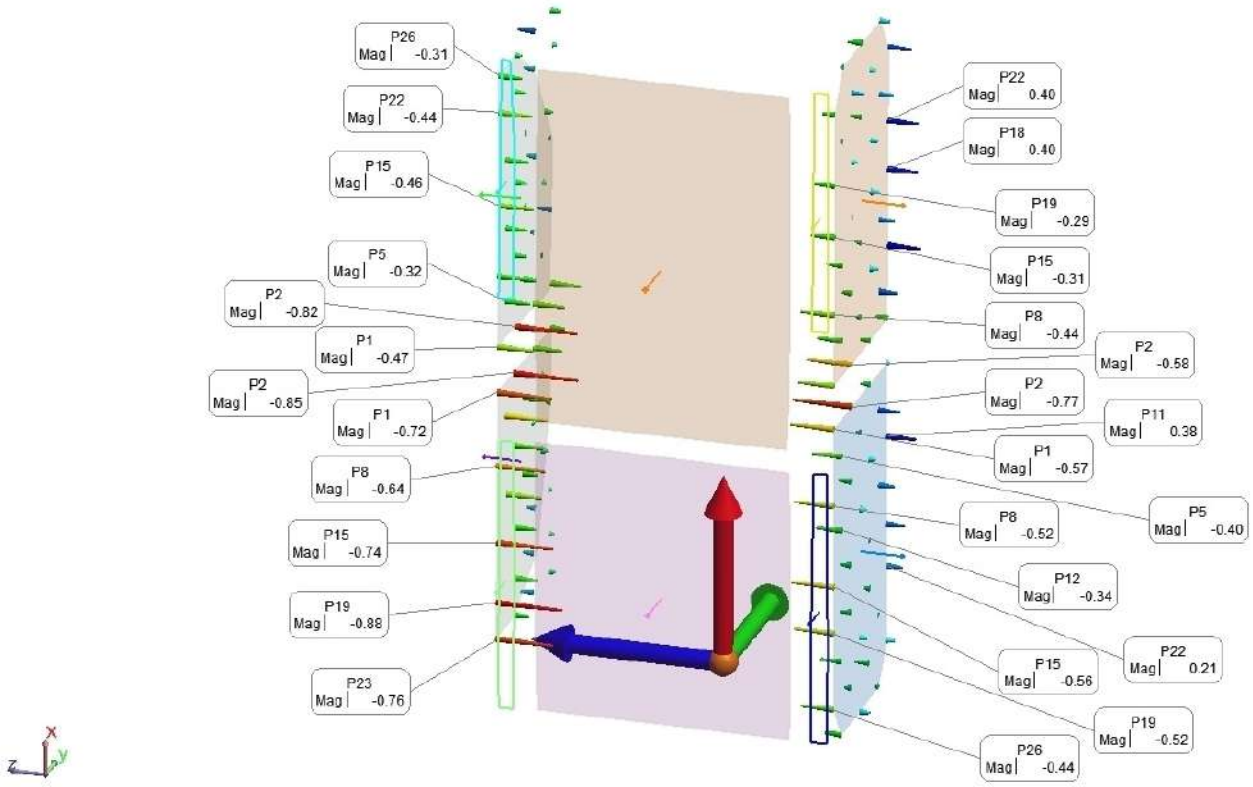

All Vectors Summary: Vector Group 8° controllo 10/06/2013 coperchi::Scostamento Punti laterali al 8° controllo				
Statistic	dX	dY	dZ	Mag
Min	-0.00	-0.00	-0.88	-0.88
Max	0.00	0.00	0.77	0.43
Average	-0.00	-0.00	-0.07	-0.14
StdDev from Avg	0.00	0.00	0.31	0.29
StdDev from Zero	0.00	0.00	0.32	0.32
RMS	0.00	0.00	0.32	0.32
Count	119			

Scostamento Punti frontali al 8° controllo

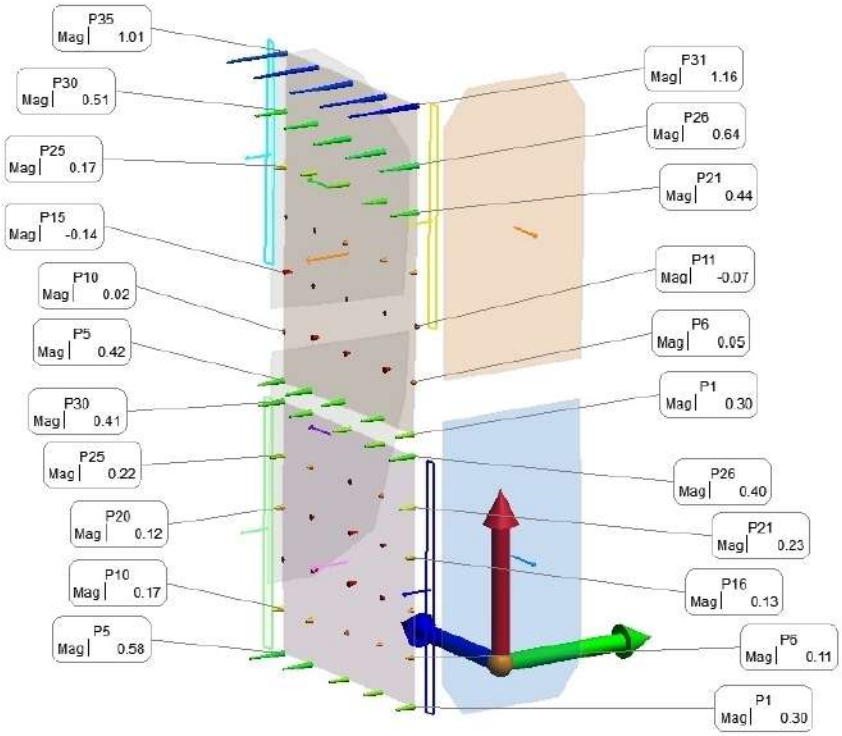

All Vectors Summary: Vector Group 8° controllo 10/06/2013 coperchi::Scostamento Punti frontrali al 8° controllo				
Statistic	dX	dY	dZ	Mag
Min	-0.00	-1.16	-0.00	-0.14
Max	0.01	0.14	0.00	1.16
Average	0.00	-0.25	-0.00	0.25
StdDev from Avg	0.00	0.32	0.00	0.32
StdDev from Zero	0.00	0.41	0.00	0.41
RMS	0.00	0.40	0.00	0.40
Count	65			

Scostamento Punti laterali al 9° controllo

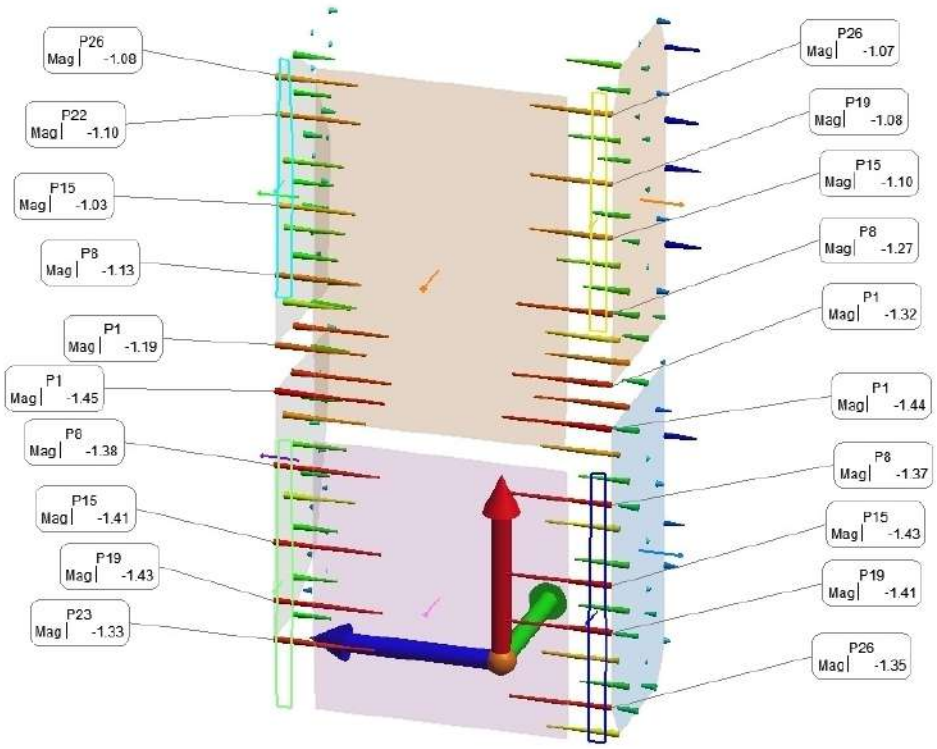

All Vectors Summary: Vector Group 9° controllo 10/06/2013 coperchi::Scostamento Punti laterali al 9° controllo				
Statistic	dX	dY	dZ	Mag
Min	-0.00	-0.00	-1.45	-1.45
Max	0.00	0.00	1.44	0.47
Average	-0.00	-0.00	-0.01	-0.46
StdDev from Avg	0.00	0.00	0.70	0.53
StdDev from Zero	0.00	0.00	0.70	0.70
RMS	0.00	0.00	0.70	0.70
Count	119			

Scostamento Punti frontali al 9° controllo

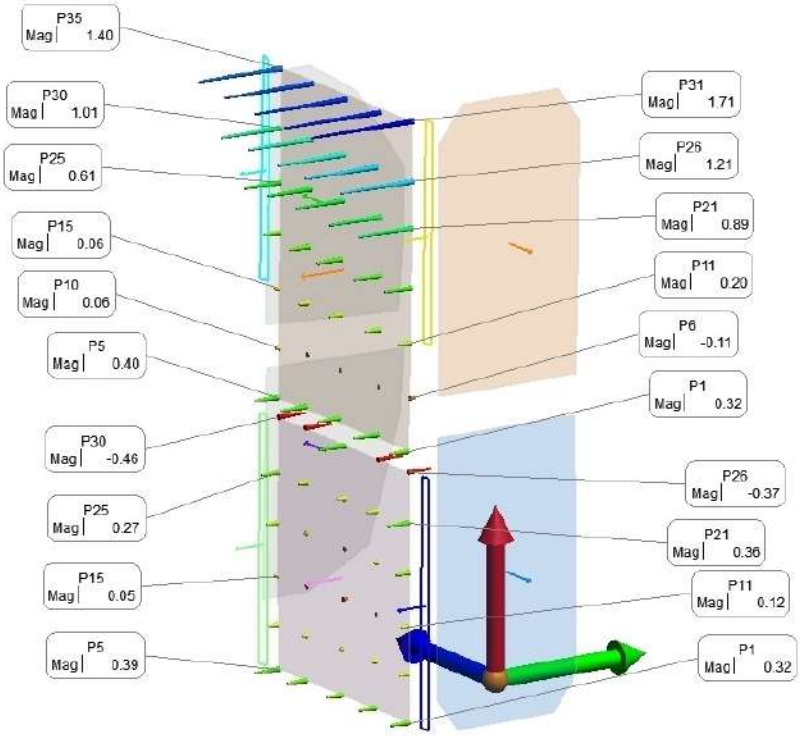

All Vectors Summary: Vector Group 9° controllo 10/06/2013 coperchi::Scostamento Punti frontrali al 9° controllo				
Statistic	dX	dY	dZ	Mag
Min	-0.01	-1.71	-0.00	-0.46
Max	0.02	0.46	0.00	1.71
Average	0.00	-0.37	-0.00	0.37
StdDev from Avg	0.01	0.50	0.00	0.50
StdDev from Zero	0.01	0.62	0.00	0.62
RMS	0.01	0.62	0.00	0.62
Count	65			

Scostamento Punti laterali al 10° controllo

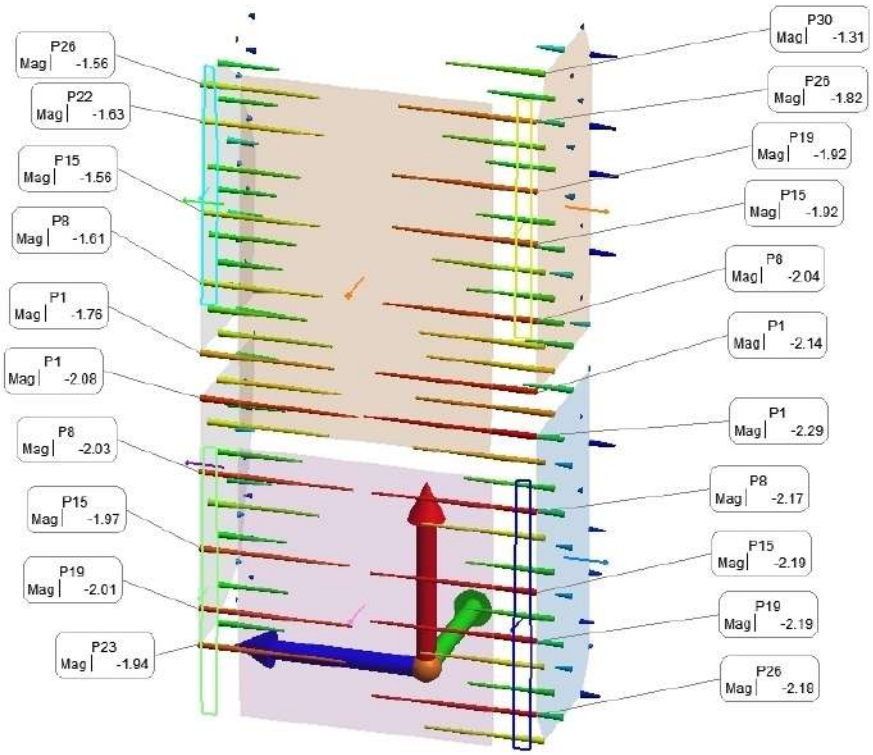

All Vectors Summary: Vector Group 10° controllo 11/06/2013 coperchi::Scostamento Punti laterali al 10° controllo				
Statistic	dX	dY	dZ	Mag
Min	-0.00	-0.01	-2.08	-2.29
Max	0.00	0.00	2.29	0.36
Average	-0.00	-0.00	0.10	-0.76
StdDev from Avg	0.00	0.00	1.09	0.78
StdDev from Zero	0.00	0.00	1.09	1.09
RMS	0.00	0.00	1.09	1.09
Count	119			

Scostamento Punti frontali al 10° controllo

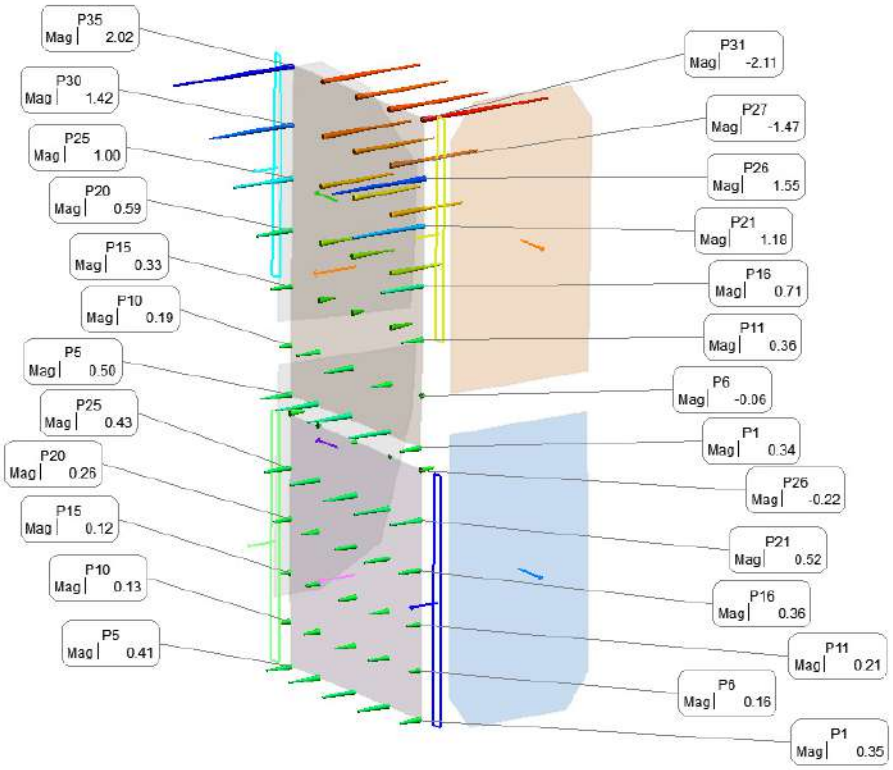

All Vectors Summary: Vector Group 10° controllo 11/06/2013 coperchi::Scostamento Punti frontali al 10° controllo				
Statistic	dX	dY	dZ	Mag
Min	-0.00	-2.02	-0.00	-2.11
Max	0.02	2.11	0.00	2.02
Average	0.00	-0.06	-0.00	0.06
StdDev from Avg	0.00	0.82	0.00	0.82
StdDev from Zero	0.01	0.82	0.00	0.82
RMS	0.01	0.81	0.00	0.81
Count	65			

Scostamento Punti laterali al 11° controllo

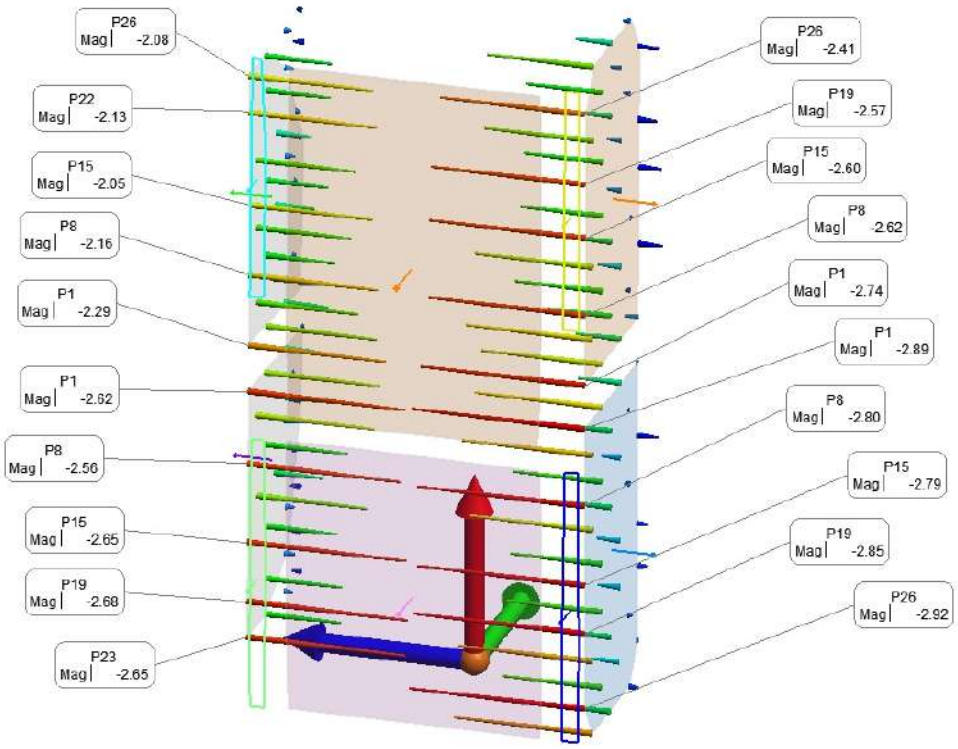

All Vectors Summary: Vector Group 11° controllo 12/06/2013 coperchi::Scostamento Punti laterali al 11° controllo				
Statistic	dX	dY	dZ	Mag
Min	-0.00	-0.01	-2.68	-2.92
Max	0.00	0.00	2.92	0.40
Average	-0.00	-0.00	0.15	-1.01
StdDev from Avg	0.00	0.00	1.42	1.00
StdDev from Zero	0.00	0.00	1.42	1.42
RMS	0.00	0.00	1.42	1.42
Count	119			

Scostamento Punti frontali al 11° controllo

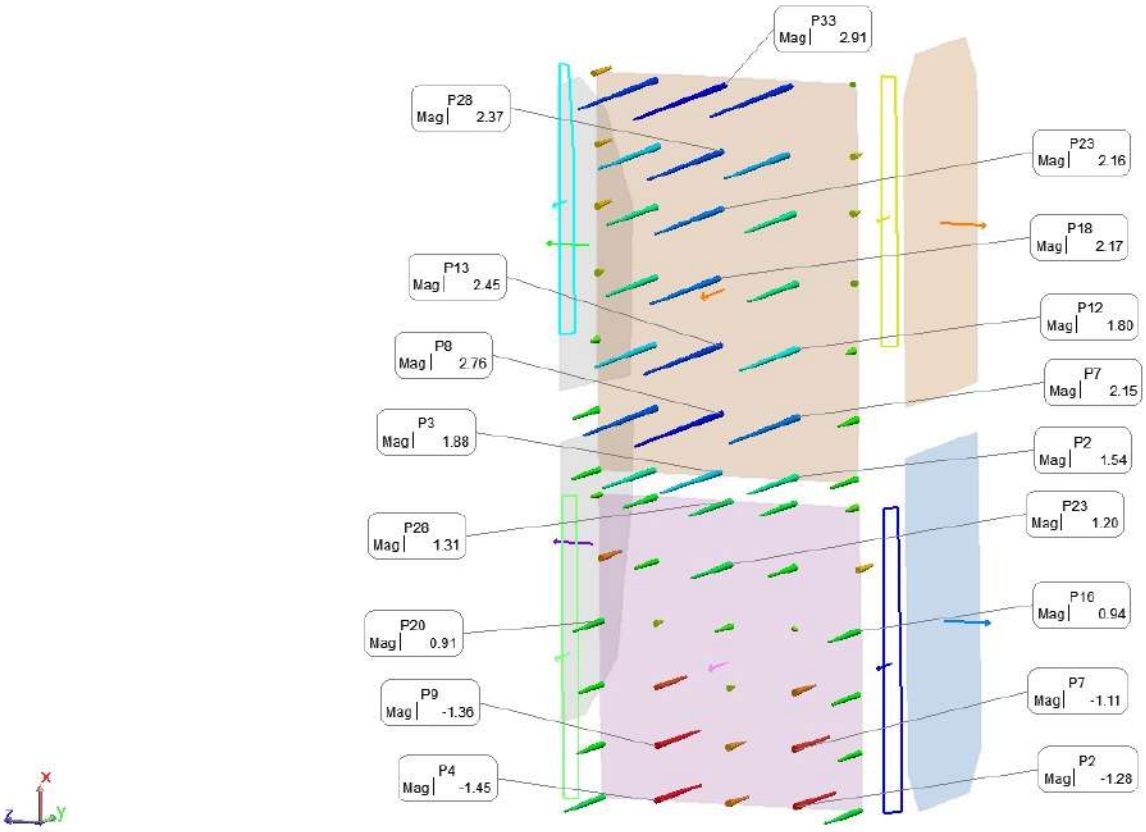

All Vectors Summary: Vector Group 11° controllo 12/06/2013 coperchi::Scostamento Punti frontali al 11° controllo				
Statistic	dX	dY	dZ	Mag
Min	-0.02	-2.91	-0.00	-1.45
Max	0.02	1.45	0.00	2.91
Average	0.00	-0.76	-0.00	0.76
StdDev from Avg	0.01	1.13	0.00	1.13
StdDev from Zero	0.01	1.36	0.00	1.36
RMS	0.01	1.35	0.00	1.35
Count	65			

Scostamento Punti frontali al 11° controllo

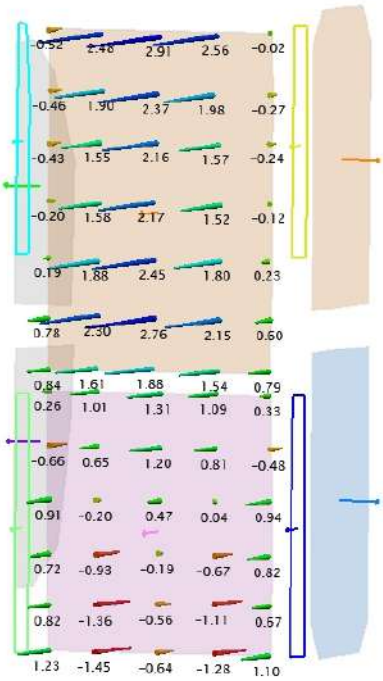

Scostamento REF11 ÷ REF20 al 12° controllo (senza trave all'interno)

Non si rileva scostamento appezzabile rispetto al controllo precedente (con trave all'interno)

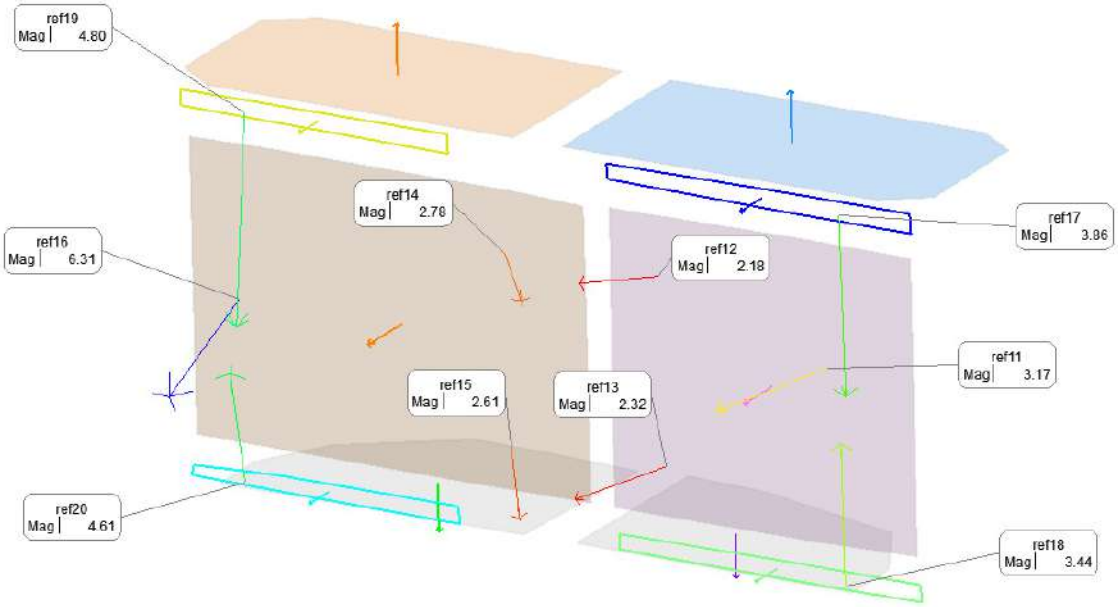

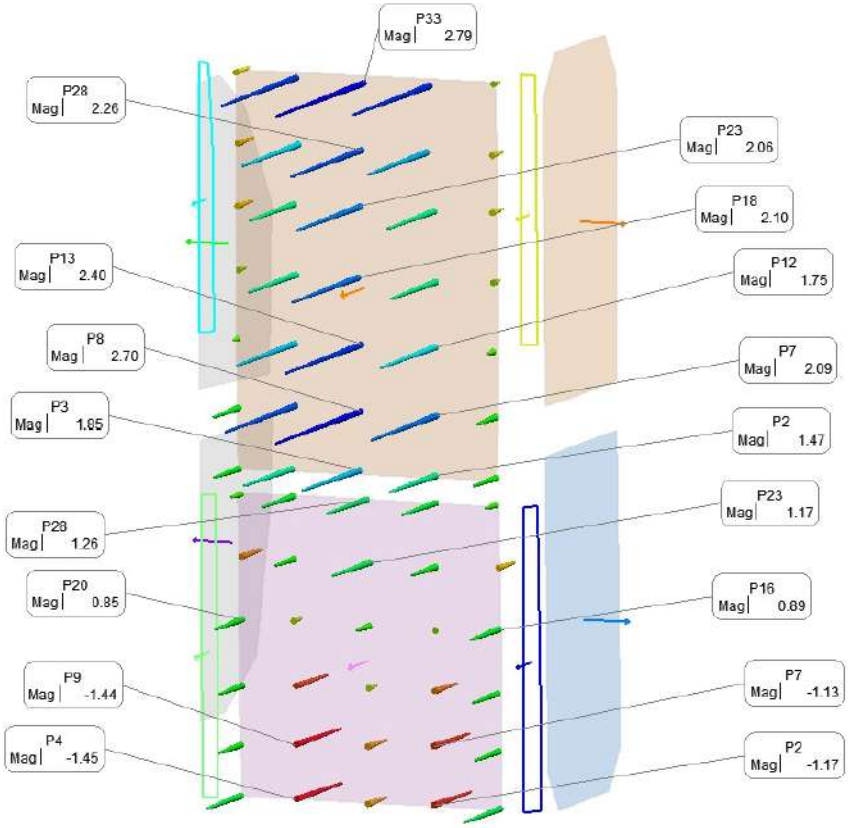

Distanze REF (11÷20) prima della saldatura dei coperchi e al 11° controllo

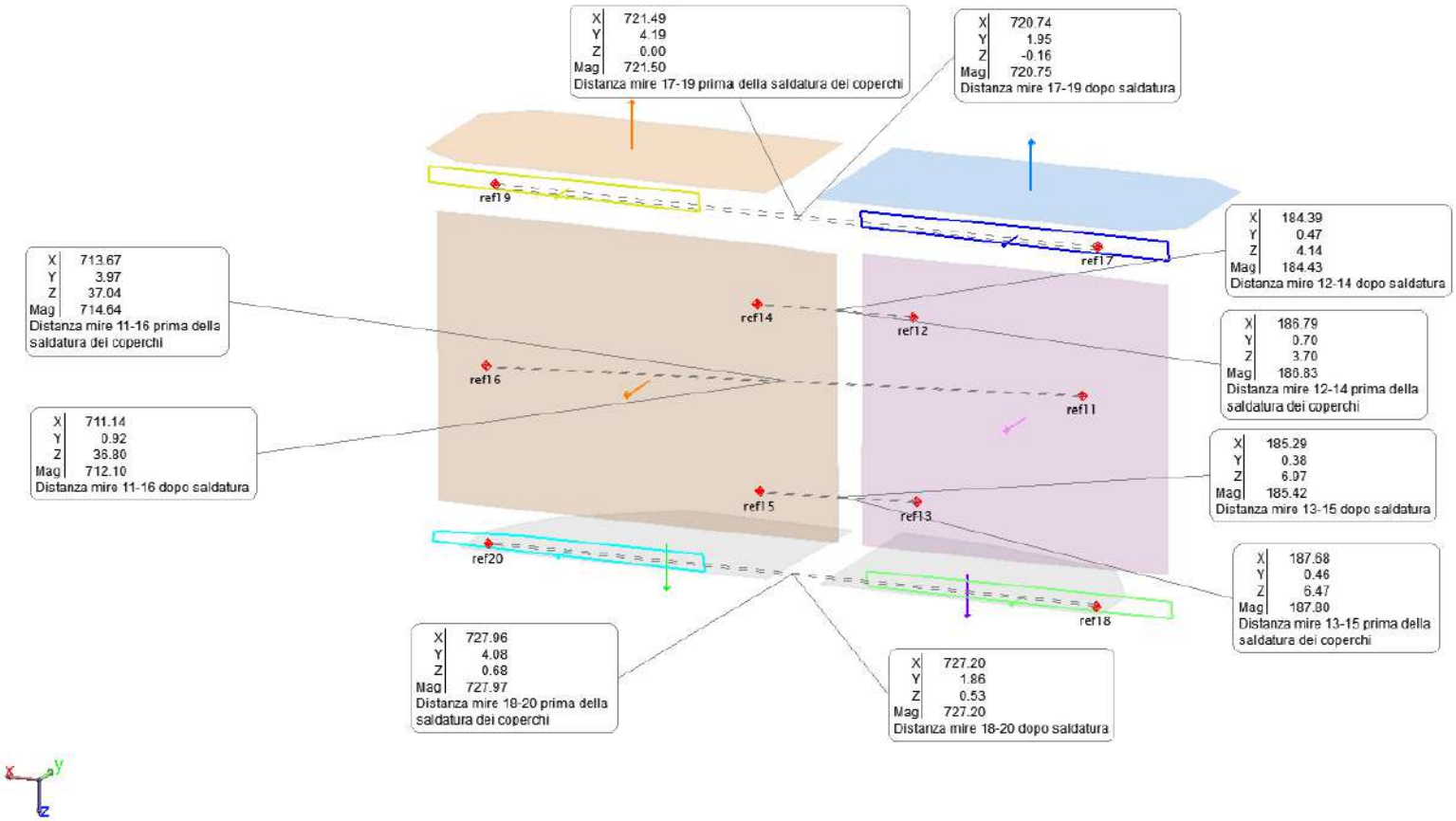

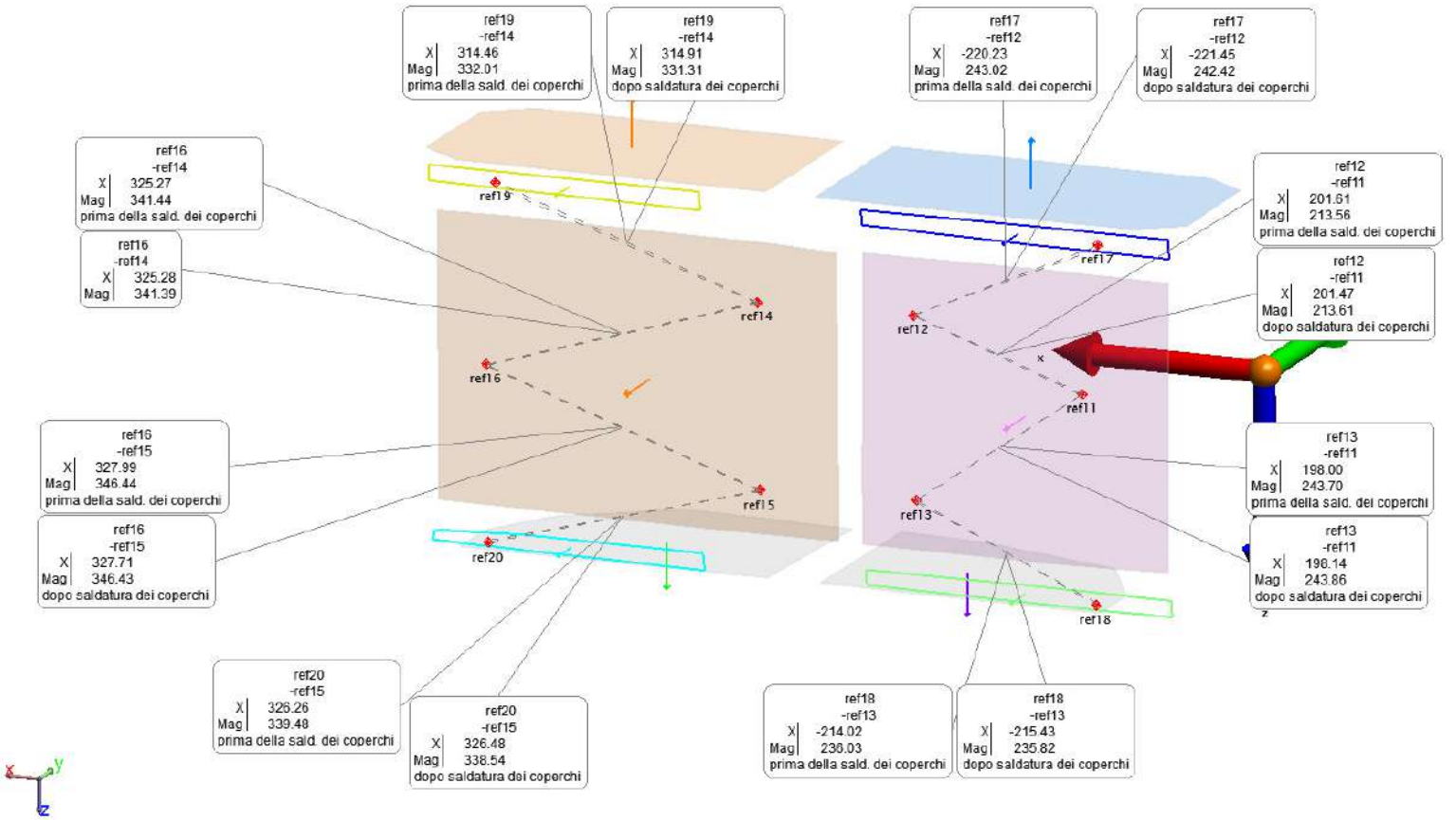

ENEA ID	TR-JT60 TF-01		**ENEA Classification**	

Report of Jc measurements on heated strands at He-inlet welding area

Project Details	*This document is issued for the execution of the Agreement of Collaboration (AoC) between Fusion for Energy (F4E) and ENEA for the supply of 9 TF coils of JT-60SA*	
	JT-60SA DMS	BA_D_23MZXE - Version # 0
Authors & Contributors	G.M. Polli, G. De Marzi, C.S. Fiamozzi Zignani	
Distribution List	Internal ENEA	**A.** UTFUS
	External	ASG-Superconductors, F4E, JAEA
Abstract	The measurement of degradation of the strands heated during welding of the He inlet insert on the conductor jacket within the qualification activity carried out by ASG is reported.	

0	22/04/2013	G.M. Polli	A. Cucchiaro	A. della Corte
Rev.	**Date**	**Issued by**	**Reviewed by**	**Approved by**

Historical List of Document Revisions

Rev.	Description	Date	Summary of Modifications with Motivations and Notes
1	Revision	24/04/2013	Fig. 3 and sections “Sample preparation” and “Conclusions” changed
	Revision		

Objective

During the qualification activity of the welding of the He inlet insert of JT-60SA TF magnet, some strands, or part of them, have been subjected to a localized heating that could have damaged or degraded their performances. Indeed in "Technical specification for manufacture of 9 Toroidal Field Coils" (SPT-JT60SA-01) is reported: "the overall thermal load on the strand must not exceed 500°C for 30 seconds". Scope of the present document is to illustrate the activities that will be carried out to evaluate the existence and amount of this degradation.

Sample preparation

The sample, shown in Fig. 1, consists of a piece JT-60SA TF conductor, denoted as TFSL-3, on which a He insert has been welded following a dedicated procedure (see Ref. [1]). The cable inside is composed of a NbTi strand denoted as K006-01C strand whose properties have been reported in Ref. [2]. During welding the temperature on the jacket surface has been measured using a dedicated thermocouple whose position has been changed during welding to be closer to the welding seam under preparation. The jacket temperature has been compared to that measured during the manufacture of another sample (TFQL-3 see Fig. 2), prepared during the welding qualification and using the same welding parameter and the same welding path of the TFSL-3 sample, equipped also with four thermocouples located on the cable itself: in both cases (TFSL-3 and TFQL-3) the temperatures measured on the jacket were maintained below 200 °C and have shown a similar trend, thus leading to the conclusion that the welding process induced the same heating in the two samples. From the measurement on the alternative sample shown in Fig. 3, one may observe that the temperature has been maintained well below the prescribed 500 °C except for a very limited time (less than 3 s).

Fig. 1 He inlet insert welded on JT-60SA TF jacket

Note also that the thermocouples were not placed on the cable in the actual sample in order to avoid any damage to the strands that could have distorted the measurements.

Fig. 2 Welding sample adopted to monitor the temperatures on the cable during welding

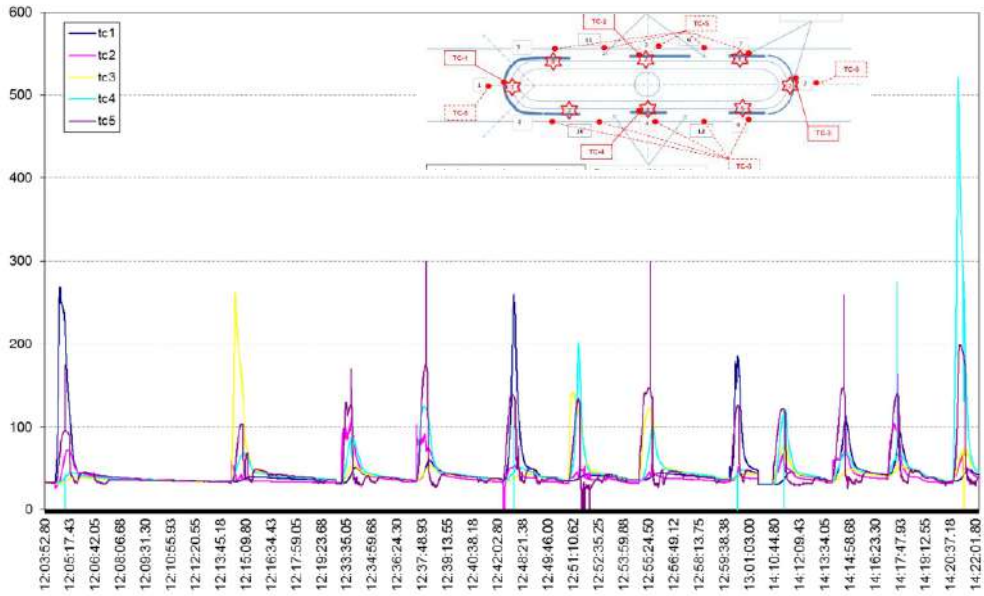

Fig. 3 Temperature measurements during He inlet insert welding qualification: k1 k2, k3 and k4 refer to temperatures on cable, whereas k5 refers to the jacket.

Strand selection

The sample jacket has been cut along the side opposite to the He inlet insert (see Fig. 4).

Fig. 4 He inlet insert welding sample before cable extraction

Then the cable has been extracted from the jacket leaving access to the window underneath the He inlet insert where the welding took place. Fig. 5 shows the appearance of the cable after the extraction.

Fig. 5 Appearance of cable after extraction.

The window on the steel foil created during the assembly on the insert leaves direct access to the cable and permits to clearly identify the strands that were subjected to heating during welding. Actually, from visual inspection it could be observed a limited impact of the heating of the strands. In fact only a few strand appeared browned due to heat deposition.

The selection of the strands to test has been done on the base of the following considerations:

- Strands whose surface appear damaged by the heat only (dark or baked effect, exempt from strong deformation due to cabling / jacketing)
- Strands where the welding step has started or finished

Once the strands have been selected, they have been clearly identified using a permanent marker, the foil has been removed and the strands to be tested have been extracted from the cable. Figure 5 shows the cable with the markers for subsequent strand extraction.

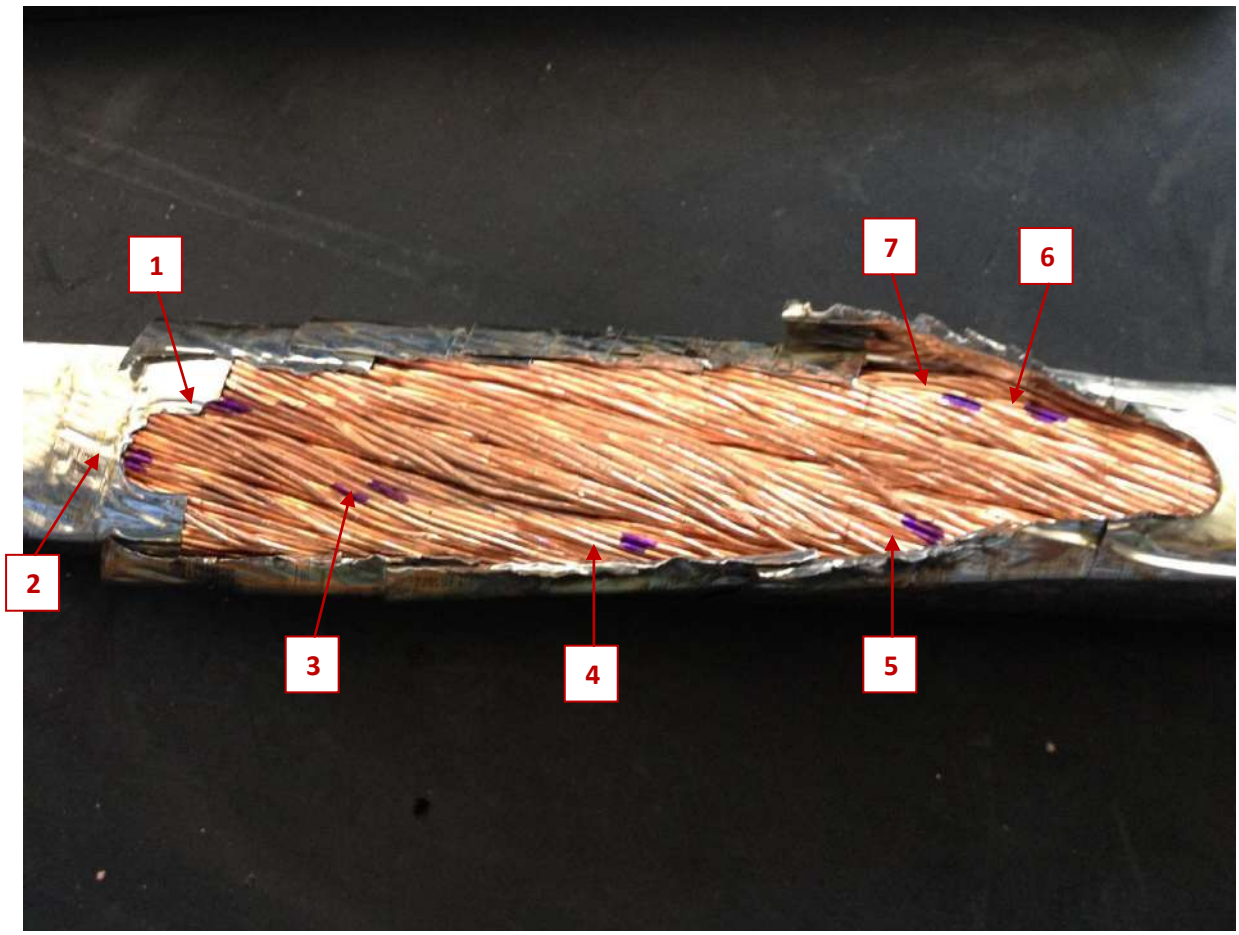

Fig. 6 Position of the VSM strand samples before the extraction.

Specifically, the rationale behind the chosen strands is the following:

1. Strand corresponding to start of welding segment #1 showing apparent surface baking
2. Strand corresponding to middle of welding segment #1 with no apparent surface baking
3. Strand corresponding to start of welding segment #10 with heavy apparent surface baking
4. Strand corresponding to middle of welding segment #4 with no apparent surface baking
5. Strand corresponding to end of welding segment #12 showing apparent surface baking
6. Strand corresponding to end of welding segment #2 showing apparent surface baking
7. Strand corresponding to start of welding segment #9 with no apparent surface baking

The corresponding triplets of each marked strands have been extracted from the cable and are shown in Fig. 7. Since each triplet is composed of one copper and two NbTi strands, the whole triplet has been extracted before preparing the samples for the measurements. From one of the two NbTi strands of each triplet, three single pieces long about 5 mm have been derived:

- one in the thermally affected zone (TAZ), corresponding to the mark made with the pen
- two in a region far away from the insert.

One of the two pieces of strands in the virgin state, have been further subjected to a controlled heating in a oven pre-heated to 500°C in protective atmosphere per 30 s (HT = Heat Treated).

Fig. 7 Triplets extracted from cable after identification of possible damage.

Fig. 8 Apparatus used to heat the strand samples up to 500 °C for 30 s.

Fig. 8 shows the apparatus used to heat the strand samples up to 500°C for 30 s to simulate the maximum allowed heating that one strand could undergo during the welding process.

On each threesome of chosen strands (for a total of 18 samples), **inductive measurements** of **Jc** have been performed aimed at identifying possible degradations through direct comparison of the TAZ vs virgin state vs controlled heated sample.

Test facility

The critical current densities have been inductively evaluated from magnetization measurements obtained with a Vibrating Sample Magnetometer (VSM) at ENEA, Frascati Laboratory. This technique implies the use of small superconducting straight samples (4÷5 mm long) magnetized at selected cryogenic temperature with an external DC field along the axis of which they vibrate at a given frequency (45 Hz in this experiment). Thus, the variation of magnetic flux through a couple of pick-up coils generate an electromotive force which is proportional to the time rate of change of the magnetic flux linking the coils. These pick-up coils are connected in anti-series in order to cancel the contribution of the background field. The signal from the coils is then proportional to the sample magnetic moment, the frequency and amplitude of vibration (0.2 mm), and to the sample volume

Critical current density (***Jc***) of the samples is obtained from the magnetization measurements using the Bean Model. For cylindrical samples positioned perpendicularly to the magnetic field, the following expression is used (c.g.s. units)::

$$J_c(B)=30\pi*\Delta M(B)/4d$$

where ΔM is referred to the difference between the positive and the negative branches of the hysteresis loop (expressed in emu/cm^3) and *d* denotes the diameter of the superconducting filaments (expressed in cm), and more accurately it is referred to the effective diameter (**d_{eff}**). The **d_{eff}** of the virgin samples is obtained by means of comparison with the sample **J_c** nominal value, and then the **Jc** of the heated samples is found using the same **d_{eff}**.

Test results

Following the procedure described in the previous sections, the results of the J_c measurements of the strand samples extracted from the cable are shown. Of the 21 samples available only a limited number have been actually tested due to the apparent absence of degradation in the so-called TAZ samples. In fact 5 of 7 TAZ, 2 of 7 VIRGIN and 2 of 7 HT samples have been tested. In particular the measurements have been limited to two characteristic temperatures:

- 4.4 K corresponding to the design He temperature at the inlet
- 6.2 K corresponding to the minimum design current sharing temperature in the conductor (see Ref. [3])

Figure 8 shows the J_c at 4.4 K in the nine sample measured. It can be noted that the TAZ and VIRG samples lie on the same curve whilst the HTb01 and HTb02 samples show a reduced current carrying capability thus showing a performance degradation.

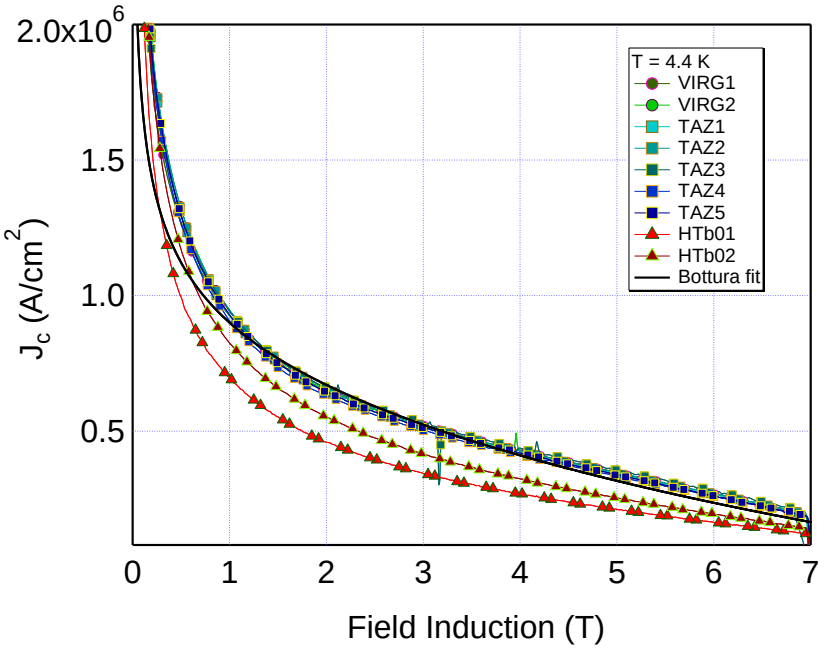

Fig. 9 Critical current density at 4.4 K as function of the external magnetic field.

Figure 9 shows the same plot of Jc as function of the externally applied magnetic field at 6.2 K. The same qualitative considerations of the previous picture apply.

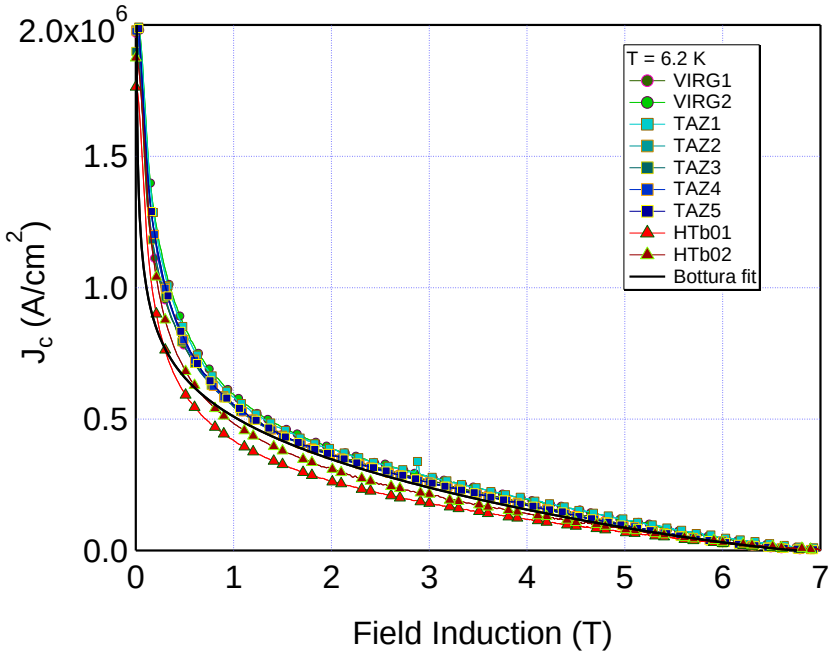

Fig. 10 Critical current density at 6.2 K as function of the external magnetic field.

Table 1 and 2 summarize the effect of the welding of the NbTi strands at 4.4 K and 6.2 K under two characteristic external magnetic fields:

- B=3.65 T corresponding to the nominal field in the He inlet area
- B=5.65 T corresponding to the maximum nominal field in the TF coil

Table 1 Current density at selected magnetic field at 4.4 K

	B=3.65 T		B=5.65 T	
Sample #	Jc [A/cm^2]	Jc/Jc_ref [%]	Jc [A/cm^2]	Jc/Jc_ref [%]
Jc_VIRG1_44K = REF	4.56E+05	100%	2.95E+05	100%
Jc_VIRG2_44K	4.56E+05	100%	2.96E+05	100%
Jc_TAZ1_44K	4.51E+05	99%	2.92E+05	99%
Jc_TAZ2_44K	4.57E+05	100%	2.98E+05	101%
Jc_TAZ3_44K	4.67E+05	102%	3.07E+05	104%
Jc_TAZ4_44K	4.41E+05	97%	2.85E+05	97%
Jc_TAZ5_44K	4.49E+05	98%	2.87E+05	98%
Jc_HTb02_44K	3.52E+05	77%	2.14E+05	72%
Jc_HTb01_44K	2.93E+05	64%	1.79E+05	61%

Table 2 Current density at selected magnetic field at 6.2 K

	B=3.65 T		B=5.65 T	
Sample #	Jc [A/m^2]	Jc/Jc_ref [%]	Jc [A/m^2]	Jc/Jc_ref [%]
Jc_VIRG1_62K = REF	2.10E+05	100%	5.17E+04	100%

Jc_VIRG2_62K	2.23E+05	106%	6.73E+04	130%
Jc_TAZ1_62K	2.25E+05	107%	7.09E+04	137%
Jc_TAZ2_62K	2.02E+05	96%	5.07E+04	98%
Jc_TAZ3_62K	2.00E+05	95%	4.88E+04	94%
Jc_TAZ4_62K	2.01E+05	96%	5.36E+04	104%
Jc_TAZ5_62K	2.00E+05	95%	5.05E+04	98%
Jc_HTb02_62K	1.64E+05	78%	4.93E+04	95%
Jc_HTb01_62K	1.39E+05	66%	4.08E+04	79%

It may be observed that the effect of the welding process on the strand is practically negligible in all cases (see the so called TAZ samples where the Jc measurements are always within +/- 5 % of the reference Jc), conversely the effect of the heat treatment is appreciable especially at low temperature with a reduction up 39 % with respect to the reference values .

Conclusions

The VSM measurements, conducted on the strand samples extracted from the cable of the He inlet insert sample manufactured by ASG Superconductors in the frame of the welding qualification process, have shown no appreciable degradation of the current carrying capabilities of the NbTi strands. From the temperature measurements taken on an alternative sample made by ASG it was shown that the maximum temperature on the cable was indeed maintained well below 300°C. This consideration together with the verification that the heat treated samples of the same cable up 500 °C for 30 s show apparent performance degradation, let us conclude that the welding process has been carried out properly. However from the measurements performed, it can be recommended to not reach the boundary indicated in the technical specification to avoid the appearance on any performance degradation.

References

[1] QCP-JT60TF-ASG-90.13646 Rev.3

[2] K006-01C strand report, data provided by L. Zani.

[3] B. Lacroix, G.M. Polli, L. Zani, “Thermo-hydraulic parametric analysis on JT-60SA TF coil fast discharge”, JT60SA Technical report, BA_D_235DME

ASG Superconductors	**PIANO DI CONTROLLO – Qualifica e Validazione dei processi** **Saldatura mock-up cassa bobina** *CONTROL PLAN – Qualification and Validation of Process* *Coil case mock-up welding*

Numero Doc. *Doc. Number*	**QCP-JT60TF-ASG-90.12110.03**	Rev. Nr. *Issue Nr.*	0	Foglio *Sheet*	1	di *of*	5

.

Riferimento ENEA *ENEA Reference*	**9 TOROIDAL FIELD COIL MAGNETS FOR JT60-SA TOKAMAK**	**Rif. Cliente ENEA** *ENEA Customer ref:*	
Fornitore *Supplier*	**ASG Superconductors**	**DMS #:**	
Rif. ID Contratto *Contract ID Ref.*	**CIG 2924336667 – CUP I81J110000300001**	**Componente:** *Item:*	**Mock-up cassa bobina** *Coil case mock-up*

Fornitore *Supplier*		**ENEA**
Preparato da *Prepared by*	Approvato da *Approved by*	Accettazione *Acceptance*
20.05.2013	20.05.2013	
Nome, Firma e Data *Name, Sign. & Date*	Nome, Firma e Data *Name, Sign. & Date*	Nome, Firma e Data *Name, Sign. & Date*

Note e Acronimi
Notes & Acronyms

* Codice
Code

@ =	Fase di fabbricazione *Manufacturing Phase*	TPIA =	Ispezione da parte di Ente Terzo *Third Party Inspection Authority*
D =	Revisione Documento *Document Review*	ENEA=	ENEA o suoi Rappresentanti *ENEA or its Representative*
R =	Rapporto di Controllo *Report Required*	W =	Utente finale *Final User*
M =	Monitorare (o Presenziare) *Monitor (or Witness)*		
N =	Notifica *Notification Point*		
A =	Autorizzazione a Procedere *Authorisation to Proceed Point*		
H =	Punto di controllo *Hold Point*		

Descrizione revisione:
Revision description:

Notifica: cinque (5) giorni lavorativi
Notification time: five (5) working days

PIANO DI CONTROLLO – Qualifica e Validazione dei processi
Saldatura mock-up cassa bobina
CONTROL PLAN – Qualification and Validation of Process
Coil case mock-up welding

Doc. Nr.	QCP-JT60TF-ASG-90.12110.03	Rev. Nr. *Issue Nr.*	0	DMS#		Foglio *Sheet*	2	di *of*	5

Item No.	Attività (fabbricazione, ispezione, …) *Activity (manufacture, inspection, …)*	Documento di Riferimento *Reference Document*	Norma *Standard*	Criterio di accettazione *Acceptance Criteria*	Verificato da *Verification by* Fornitore *Supplier* Nome/firma/data *Name/sign/date*		TPIA Nome/firma/data *Name/sign/date*		ENEA Nome/firma/data *Name/sign/date*		W Nome/firma/data *Name/sign/date*		Registrazione (rapporto, NCR, …) *Records (report, NCR, …)*	Osservazioni *Observations*
1.	**REALIZZAZIONE MOCK UP SALDATURA CASSA BOBINA** ***COIL CASE MOCK-UP WELDING***	SPT-JT60SA-01 rev.0			*		*		*		*			
1.1	Controllo documentazione: • rapporti di controllo dimensionale • certificati dei materiali *Check of QC documents:* • *dimensional test reports* • *material certificates*	dwg.12110.03 (W. Tosto)			R				R					
1.2	Controllo certificati materiale d'apporto *Check of certificates about filler material*				R				R					
1.3	Posizionamento termocoppie su trave di impregnazione per controllo temperatura *Positioning of thermocouples onto impregnation beam for temperature monitoring*				@									
1.4	Isolamento trave di impregnazione con tela di vetro sp. 5mm per "embedding" *Insulation of impregnation beam with glass fiber cloth th.5mm for embedding*				@ R				R					Impregnation beam ref. doc. **QCP-JT60TF-ASG-90.13403**
1.5	Posizionamento sistema di protezione a rovescio su cianfrino mock-up *Positioning of baking gas protection tool on mock-up chamfer*				@ R				R					
1.6	Posizionamento trave all'inteno del mock-up *Positioning of impregnation beam inside the mock-up*				@ R				R					
1.7	Posizionamento riferimenti per controllo ritiro di saldatura *Positioning of references for monitoring of welding shrinkage*	700RM14583			@									
1.8	Controlli dimensionali assieme prima della saldatura *Dimensional check of assembly before welding*				R				R					

PIANO DI CONTROLLO – Qualifica e Validazione dei processi
Saldatura mock-up cassa bobina
CONTROL PLAN – Qualification and Validation of Process
Coil case mock-up welding

Doc. Nr.	QCP-JT60TF-ASG-90.12110.03	Rev. Nr. *Issue Nr.*	0	DMS#		Foglio *Sheet*	3	di *of*	5

Item No.	Attività (fabbricazione, ispezione, …) *Activity (manufacture, inspection, …)*	Documento di Riferimento *Reference Document*	Norma *Standard*	Criterio di accettazione *Acceptance Criteria*	Verificato da *Verification by* Fornitore *Supplier* Nome/firma/data *Name/sign/date*		TPIA Nome/firma/data *Name/sign/date*		ENEA Nome/firma/data *Name/sign/date*		W Nome/firma/data *Name/sign/date*		Registrazione (rapporto, NCR, …) *Records (report, NCR, …)*	Osservazioni *Observations*
2.	**TEST DI QUALIFICA PROCESSO SALDATURA TRASVERSALE** ***TRANSVERSAL WELD QUALIFICATION TEST***	SPT-JT60SA-01 rev.0												
2.1	Esecuzione 1° passata TIG alla radice del cianfrino Registrazione temperatura *1st TIG welding at the root of the chamfer* *Temperature monitoring*	dwg.12110.03 (W. Tosto)			@ R				N M R					
2.2	Controlli dimensionali dopo 1° passata TIG *Dimensional check after 1st TIG welding*				R				N M R					
2.3	Esecuzione successive passate TIG Registrazione temperatura *TIG welding continuation* *Temperature monitoring*				@ R				N M R					
2.4	Controlli dimensionali dopo passate TIG *Dimensional check after TIG welding*				R				N M R					
2.5	Saldatura MIG di riempimento cianfrino Registrazione temperatura *MIG welding for chamfer filling* *Temperature monitoring*				@ R				N M R					
2.6	Controlli dimensionali dopo saldatura MIG *Dimensional check after MIG welding*				R				N M R					
2.7	Controlli non distruttivi delle saldature: a) controllo visivo, b) liquidi penetranti c) ultrasuoni *Non destructive test of welds:* *a) visual check* *b) penetrant test* *c) UT test*		ASME VIII div.3		R				N R					

Item No.	Attività (fabbricazione, ispezione, …) *Activity (manufacture, inspection, …)*	Documento di Riferimento *Reference Document*	Norma *Standard*	Criterio di accettazione *Acceptance Criteria*	Verificato da *Verification by* Fornitore *Supplier* Nome/firma/data *Name/sign/date*		TPIA Nome/firma/data *Name/sign/date*		ENEA Nome/firma/data *Name/sign/date*		W Nome/firma/data *Name/sign/date*		Registrazione (rapporto, NCR, …) *Records (report, NCR, …)*	Osservazioni *Observations*
2.8	Controlli distruttivi: a) taglio campione b) analisi micrografica *Destructive test:* *a) cutting of sample* *b) micrographic analysis*		ASME VIII div.3		@ R				R					
3.	**TEST DI QUALIFICA PROCESSO SALDATURA LONGITUDINALE** ***LONGITUDINAL WELD QUALIFICATION TEST***	SPT-JT60SA-01 rev.0												
3.1	Esecuzione 1° passata TIG alla radice del cianfrino Registrazione temperatura *1st TIG welding at the root of the chamfer* *Temperature monitoring*	dwg.12110.03 (W. Tosto)			@ R				N M R					
3.2	Controlli dimensionali dopo 1° passata TIG *Dimensional check after 1st TIG welding*				R				N M R					
3.3	Esecuzione successive passate TIG Registrazione temperatura *TIG welding continuation* *Temperature monitoring*				@ R				N M R					
3.4	Controlli dimensionali dopo passate TIG *Dimensional check after TIG welding*				R				N M R					
3.5	Saldatura MIG di riempimento cianfrino Registrazione temperatura *MIG welding for chamfer filling* *Temperature monitoring*				@ R				N M R					
3.6	Controlli dimensionali dopo saldatura MIG *Dimensional check after MIG welding*				R				N M R					

PIANO DI CONTROLLO – Qualifica e Validazione dei processi
Saldatura mock-up cassa bobina
CONTROL PLAN – Qualification and Validation of Process
Coil case mock-up welding

Doc. Nr.	QCP-JT60TF-ASG-90.12110.03	Rev. Nr. *Issue Nr.*	0	DMS#		Foglio *Sheet*	5	di *of*	5

Item No.	Attività (fabbricazione, ispezione, …) *Activity (manufacture, inspection, …)*	Documento di Riferimento *Reference Document*	Norma *Standard*	Criterio di accettazione *Acceptance Criteria*	Verificato da *Verification by* Fornitore *Supplier* Nome/firma/data *Name/sign/date*		TPIA Nome/firma/data *Name/sign/date*		ENEA Nome/firma/data *Name/sign/date*		W Nome/firma/data *Name/sign/date*		Registrazione (rapporto, NCR, …) *Records (report, NCR, …)*	Osservazioni *Observations*
3.7	Controlli non distruttivi delle saldature: a) controllo visivo, b) liquidi penetranti c) ultrasuoni *Non destructive test of welds:* *a) visual check* *b) penetrant test* *c) UT test*		ASME VIII div.3		R				N R					
3.8	Controlli distruttivi: a) taglio campione b) analisi micrografica *Destructive test:* *a) cutting of sample* *b) micrographic analysis*		ASME VIII div.3		@ R				R					
4.	**DOCUMENTAZIONE QA** ***QA DOSSIER***	SPT-JT60SA-01 rev.0												
4.1	Controllo finale documentazione *QA dossier final verification*				D				R					

PIANO di CONTROLLO – Terminazione Elettrica (serie)
CONTROL PLAN - Electrical Termination (series)

Numero Doc. *Doc. Number*	**QCP-JT60TF-ASG-90.13754-S**	Rev. Nr. *Issue Nr.*	**0**	Foglio *Sheet*	1	di *of*	3

Riferimento ENEA *ENEA Reference*	**9 TOROIDAL FIELD COIL MAGNETS FOR JT60-SA TOKAMAK**	**Rif. Cliente ENEA** *ENEA Customer ref:*	
Fornitore *Supplier*	**ASG Superconductors**	**DMS #:**	
Rif. ID Contratto *Contract ID Ref.*	**CIG 2924336667 – CUP I81J110000300001**	**Componente:** *Item:*	**Terminazione Elettrica n.** *Electrical Termination id. nr.* _____

Fornitore *Supplier*		**ENEA**
Preparato da *Prepared by*	Approvato da *Approved by*	Accettazione *Acceptance*
27.06.2013	27.06.2013	
Nome, Firma e Data *Name, Sign. & Date*	Nome, Firma e Data *Name, Sign. & Date*	Nome, Firma e Data *Name, Sign. & Date*

Note e Acronimi
Notes & Acronyms

* Codice
Code

@ =	Fase di fabbricazione *Manufacturing Phase*	TPIA =	Ispezione da parte di Ente Terzo *Third Party Inspection Authority*
D =	Revisione Documento *Document Review*	ENEA=	ENEA o suoi Rappresentanti *ENEA or its Representative*
R =	Rapporto di Controllo *Report Required*	W =	Utente finale *Final User*
M =	Monitorare (o Presenziare) *Monitor (or Witness)*		
N =	Notifica *Notification Point*		
A =	Autorizzazione a Procedere *Authorisation to Proceed Point*		
H =	Punto di controllo *Hold Point*		

Descrizione revisione: documento adattato per produzione di serie, derivato dal doc. di qualifica del processo (QCP-JT60TF-ASG-90.13754)
Revision description: document revised for series production, derived from qualification process doc. (QCP-JT60TF-ASG-90.13754)

Notifica: cinque (5) giorni lavorativi
Notification time: five (5) working days

N.A. = Non Applicabile / *Not Applicable*

PIANO di CONTROLLO – Terminazione Elettrica (serie)
CONTROL PLAN - Electrical Termination (series)

Doc. Nr.	QCP-JT60TF-ASG-90.13754-S	Rev. Nr. *Issue Nr.*	0	DMS#		Foglio *Sheet*	2	di *of*	3

Item No.	Attività (fabbricazione, ispezione, …) *Activity (manufacture, inspection, …)*	Documento di Riferimento *Reference Document*	Norma *Standard*	Criterio di accettazione *Acceptance Criteria*	Verificato da *Verification by* Fornitore *Supplier* Nome/firma/data *Name/sign/date*		TPIA Nome/firma/data *Name/sign/date*		ENEA Nome/firma/data *Name/sign/date*		W Nome/firma/data *Name/sign/date*		Registrazione (rapporto, NCR, …) *Records (report, NCR, …)*	Osservazioni *Observations*
□.	**TERMINAZIONE ELETTRICA** ***ELECTRICAL TERMINATION***	SPT-JT60SA-01 rev.0 - § 7.3			*		*		*		*			
1.1	Preparazione conduttore: a) taglio del conduttore b) rimozione del jacket c) applicazione collare di bloccaggio estremità conduttore d) rimozione della lamina in acciaio inox di protezione della corda e) controllo visivo *Conductor preparation:* *a) cable cutting* *b) removing of jacket* *c) install a stiffening ring onto the conductor end* *d) removing of s.s. protection sheet* *e) visual check*	JT-60SA CEA doc. n. I0000304235 ver.1.3 dwg. 653RM13754 t.s. 700RM13851 t.s. 700RM13988		e) assenza di danni agli strands / *no damaged strands*	@				N		N.A.	/		
1.2	Preparazione del cavo: a) argentatura degli strands b) controllo visivo e test di adesione argentatura *Cable preparation:* *a) silver plating* *b) visual check and adhesive-tape test*	"	SIFCO process code 4350 No.3 etching & demusting SIFCO process silver non-cyanide code 3084/5870	a) th≈3micron b) Scotch 3M 2525 adhesive tape	@ R				N R		N.A.	/		
1.3	Preparazione della scatola di collegamento: a) controllo US del'interfaccia rame/acciaio b) controllo delle superfici di contatto b) argentatura della faccia interna c) controllo visivo e test di adesione argentatura *Prep. of connecting box ("single box"):* *a) US check bonded surfaces Cu/steel* *b) check of contact surfaces* *c) silver plating of inner surface* *d) visual check and adhesive-tape test*	"	SIFCO process code 4350 No.3 etching & demusting SIFCO process silver non-cyanide code 3084/5870	a) assenza di difetti / *no defects* >5mm^2 b) assenza di difetti superficiali / *no visible defects on the surface* c) th≈28 micron d) Scotch 3M 2525 adhesive tape	@ R				N R		N.A.	/	a) doc. HEM	

PIANO di CONTROLLO – Terminazione Elettrica (serie)
CONTROL PLAN - Electrical Termination (series)

Doc. Nr.	QCP-JT60TF-ASG-90.13754-S	Rev. Nr. *Issue Nr.*	0	DMS#		Foglio *Sheet*	3	di *of*	3

Item No.	Attività (fabbricazione, ispezione, …) *Activity (manufacture, inspection, …)*	Documento di Riferimento *Reference Document*	Norma *Standard*	Criterio di accettazione *Acceptance Criteria*	Verificato da *Verification by* Fornitore *Supplier* Nome/firma/data *Name/sign/date*		TPIA Nome/firma/data *Name/sign/date*		ENEA Nome/firma/data *Name/sign/date*		W Nome/firma/data *Name/sign/date*		Registrazione (rapporto, NCR, …) *Records (report, NCR, …)*	Osservazioni *Observations*
1.4	Inserimento del cavo nella scatola Chiusura coperchio e pressatura Controllo visivo assieme Registrazione parametri di pressatura Controllo gap di chiusura coperchio *Positioning of the conductor inside the box* *Closure of box and pressing* *Visual check of the assembly* *Pressing parameters record* *Check of gap after closure of covers*	"		P≈120 tons / 300 mm (MAX)	@				N		N.A.	/		
1.5	Saldatura TIG di coperchio, piastra di chiusura e jacket: controllo della temp. della superficie in rame *TIG welding of cover, closure plate and jacket: check of temperature of Cu sole*	"	ASME code sect. IX	T<300°C / 30 sec	@ R				N R		N.A.	/		
2.	**CONTROLLI FINALI** ***FINAL CHECK***	**SPT-JT60SA-01 rev.0 - § 7.3**												
2.1	Controllo saldature: controllo visivo, liquidi penetranti *Check of welds: visual inspection, penetrant test*	JT-60SA CEA doc. n. I0000304235 ver.1.3 dwg. 653RM13754 t.s. 700RM13851 t.s. 700RM13988	ASME code sect. IX	assenza di difetti di dim >0.4 mm *no defects >0.4 mm*	R				R		N.A.	/		
2.2	Verifica dimensionale assieme dopo saldatura *Dimensional check of assembly after welding*	"		Assenza deformazioni evidenti / *no noticeable deformation*	V						N.A.			
3.	**Documentazione QA** ***QA dossier***													
3.1	Controllo finale documentazione *QA dossier final verification*	JT-60SA CEA doc. n. I0000304235 ver.1.3 dwg. 653RM13754 t.s. 700RM13851 t.s. 700RM13988			D				R		N.A.	/		

PIANO di CONTROLLO – Giunzione Elettrica Interna (serie)
CONTROL PLAN - Electrical Internal Joint (series)

Numero Doc. *Doc. Number*	**QCP-JT60TF-ASG-90.13729-S**	Rev. Nr. *Issue Nr.*	**0**	Foglio *Sheet*	1	di *of*	3

Riferimento ENEA *ENEA Reference*	**9 TOROIDAL FIELD COIL MAGNETS FOR JT60-SA TOKAMAK**	**Rif. Cliente ENEA** *ENEA Customer ref:*	
Fornitore *Supplier*	**ASG Superconductors**	**DMS #:**	
Rif. ID Contratto *Contract ID Ref.*	**CIG 2924336667 – CUP I81J110000300001**	**Componente:** *Item:*	**Giunzione Elettrica Interna n.** *Electrical Internal Joint id nr. _____*

Fornitore *Supplier*		**ENEA**
Preparato da *Prepared by*	Approvato da *Approved by*	Accettazione *Acceptance*
27.06.2013	27.06.2013	
Nome, Firma e Data *Name, Sign. & Date*	Nome, Firma e Data *Name, Sign. & Date*	Nome, Firma e Data *Name, Sign. & Date*

Note e Acronimi
Notes & Acronyms

* Codice
Code

@ =	Fase di fabbricazione *Manufacturing Phase*	TPIA =	Ispezione da parte di Ente Terzo *Third Party Inspection Authority*
D =	Revisione Documento *Document Review*	ENEA=	ENEA o suoi Rappresentanti *ENEA or its Representative*
R =	Rapporto di Controllo *Report Required*	W =	Utente finale *Final User*
M =	Monitorare (o Presenziare) *Monitor (or Witness)*		
N =	Notifica *Notification Point*		
A =	Autorizzazione a Procedere *Authorisation to Proceed Point*		
H =	Punto di controllo *Hold Point*		

Descrizione revisione: documento adattato per produzione di serie, derivato dal doc. di qualifica del processo (QCP-JT60TF-ASG-90.13729)
Revision description: document revised for series production, derived from qualification process doc. (QCP-JT60TF-ASG-90.13729)

Notifica: cinque (5) giorni lavorativi
Notification time: five (5) working days

N.A. = Non Applicabile / *Not Applicable*

PIANO di CONTROLLO – Giunzione Elettrica Interna (serie)

CONTROL PLAN - Electrical Internal Joint (series)

Doc. Nr.	QCP-JT60TF-ASG-90.13729-S	Rev. Nr. *Issue Nr.*	0	DMS#		Foglio *Sheet*	2	di *of*	3

Item No.	Attività (fabbricazione, ispezione, …) *Activity (manufacture, inspection, …)*	Documento di Riferimento *Reference Document*	Norma *Standard*	Criterio di accettazione *Acceptance Criteria*	Verificato da *Verification by* Fornitore *Supplier* Nome/firma/data *Name/sign/date*		TPIA Nome/firma/data *Name/sign/date*		ENEA Nome/firma/data *Name/sign/date*		W Nome/firma/data *Name/sign/date*		Registrazione (rapporto, NCR, …) *Records (report, NCR, …)*	Osservazioni *Observations*
1.	**GIUNZIONE ELETTRICA INTERNA** ***FULL SIZE INTERNAL JOINT***	**SPT-JT60SA-01 rev.0 - § 7.2**			*		*		*		*			
1.1	Preparazione conduttore: a) taglio del conduttore b) rimozione del jacket c) applicazione collare di bloccaggio estremità conduttore d) rimozione della lamina in acciaio inox di protezione della corda e) controllo visivo *Conductor preparation:* *a) cable cutting* *b) removing of jacket* *c) install a stiffening ring onto the conductor end* *d) removing of s.s. protection sheet* *e) visual check*	JT-60SA CEA doc. n. I0000526868 ver.1 dwg. 653RM13729 t.s. 700RM13851 t.s. 700RM13988		e) assenza di danni agli strands / *no damaged strands*	@				N		N.A	/		
1.2	Preparazione del cavo: a) argentatura degli strands b) controllo visivo e test di adesione argentatura *Cable preparation:* *a) silver plating* *b) visual check and adhesive-tape test*	"	SIFCO process code 4350 No.3 etching & demusting SIFCO process silver non-cyanide code 3084/5870	a) th≈3micron b) Scotch 3M 2525 adhesive tape	@ R				N R		N.A	/		
1.3	Preparazione della scatola di collegamento: a) controllo US del'interfaccia rame/acciaio b) controllo delle superfici di contatto b) argentatura della faccia interna c) controllo visivo e test di adesione argentatura *Prep. of connecting box ("monolitic twin box"):* *a) US check bonded surfaces Cu/steel* *b) check of contact surfaces* *c) silver plating of inner surface* *d) visual check and adhesive-tape test*	"	SIFCO process code 4350 No.3 etching & demusting SIFCO process silver non-cyanide code 3084/5870	a) assenza di difetti / *no defects* >5mm^2 b) assenza di difetti superficiali / *no visible defects on the surface* c) th≈28 micron d) Scotch 3M 2525 adhesive tape	@ R				N R		N.A	/	a) doc. HEM	

PIANO di CONTROLLO – Giunzione Elettrica Interna (serie)

CONTROL PLAN - Electrical Internal Joint (series)

Doc. Nr.	QCP-JT60TF-ASG-90.13729-S	Rev. Nr. *Issue Nr.*	0	DMS#		Foglio *Sheet*	3	di *of*	3

Item No.	Attività (fabbricazione, ispezione, …) *Activity (manufacture, inspection, …)*	Documento di Riferimento *Reference Document*	Norma *Standard*	Criterio di accettazione *Acceptance Criteria*	Verificato da *Verification by* Fornitore *Supplier* Nome/firma/data *Name/sign/date*		TPIA Nome/firma/data *Name/sign/date*		ENEA Nome/firma/data *Name/sign/date*		W Nome/firma/data *Name/sign/date*		Registrazione (rapporto, NCR, …) *Records (report, NCR, …)*	Osservazioni *Observations*
1.4	Inserimento dei due cavi nella scatola Chiusura coperchi e pressatura Controllo visivo assieme Registrazione parametri di pressatura Controllo gap di chiusura coperchi *Positioning of both 2 conductors inside the box* *Closure of box and pressing* *Visual check of the assembly* *Pressing parameters record* *Check of gap after closure of covers*	"		P≈120 tons / 300 mm (MAX)	@				N		N.A	/		
1.5	Saldatura TIG di coperchi, piastre di chiusura e jacket: controllo della temp. della superficie in rame *TIG welding of covers, closure plates and jacket: check of temperature of Cu sole*	"	ASME code sect. IX	T<300°C / 30 sec	@ R				N R		N.A	/		
2.	**CONTROLLI FINALI** ***FINAL CHECK***	**SPT-JT60SA-01 rev.0 - § 7.2**												
2.1	Controllo saldature: controllo visivo, liquidi penetranti *Check of welds: visual inspection, penetrant test*	JT-60SA CEA doc. n. I0000526868 ver.1 dwg. 653RM13729 t.s. 700RM13851 t.s. 700RM13988	ASME code sect. IX	assenza di difetti di dim >0.4 mm *no defects >0.4 mm*	R				R		N.A	/		
2.2	Verifica dimensionale assieme dopo saldatura *Dimensional check of assembly after welding*	"		Assenza deformazioni evidenti / *no noticeable deformation*	V						N.A	/		
3.	**Documentazione QA** ***QA dossier***													
3.1	Controllo finale documentazione *QA dossier final verification*	JT-60SA CEA doc. n. I0000526868 ver.1 dwg. 653RM13729 t.s. 700RM13851 t.s. 700RM13988			D				R		N.A	/		

ASG Superconductors	**PIANO DI CONTROLLO – Isolatore elettrico (serie)** *CONTROL PLAN – Insulation Breaker (series)*

Numero Doc. *Doc. Number*	**QCP-JT60TF-ASG-90.13952-S**	Rev. Nr. *Issue Nr.*	0	Foglio *Sheet*	1	di *of*	3

Riferimento ENEA *ENEA Reference*	**9 TOROIDAL FIELD COIL MAGNETS FOR JT60-SA TOKAMAK**	**Rif. Cliente ENEA** *ENEA Customer ref:*	
Fornitore *Supplier*	**ASG Superconductors**	**DMS #:**	
Rif. ID Contratto *Contract ID Ref.*	**CIG 2924336667 – CUP I81J110000300001**	**Componente:** *Item:*	**Isolatore n.** *Insulation breaker id. nr.*

Fornitore *Supplier*		**ENEA**
Preparato da *Prepared by*	Approvato da *Approved by*	Accettazione *Acceptance*
04.04.2013	04.04.2013	04.04.2013
Nome, Firma e Data *Name, Sign. & Date*	Nome, Firma e Data *Name, Sign. & Date*	Nome, Firma e Data *Name, Sign. & Date*

Note e Acronimi
Notes & Acronyms

* Codice
Code

@ =	Fase di fabbricazione *Manufacturing Phase*	TPIA =	Ispezione da parte di Ente Terzo *Third Party Inspection Authority*
D =	Revisione Documento *Document Review*	ENEA=	ENEA o suoi Rappresentanti *ENEA or its Representative*
R =	Rapporto di Controllo *Report Required*	W =	Utente finale *Final User*
M =	Monitorare (o Presenziare) *Monitor (or Witness)*		
N =	Notifica *Notification Point*		
A =	Autorizzazione a Procedere *Authorisation to Proceed Point*		
H =	Punto di controllo *Hold Point*		

Descrizione revisione: documento adattato per produzione di serie, derivato dal doc. di qualifica del processo (QCP-JT60TF-ASG-90.13952)
Revision description: document revised for series production, derived from qualification process doc. (QCP-JT60TF-ASG-90.13952)

Notifica: cinque (5) giorni lavorativi
Notification time: five (5) working days

PIANO DI CONTROLLO – Isolatore elettrico (serie)

CONTROL PLAN – Insulation Breaker (series)

Doc. Nr.	QCP-JT60TF-ASG-90.13952-S	Rev. Nr. *Issue Nr.*	0	DMS#		Foglio *Sheet*	2	di *of*	3

Item No.	Attività (fabbricazione, ispezione, …) *Activity (manufacture, inspection, …)*	Documento di Riferimento *Reference Document*	Norma *Standard*	Criterio di accettazione *Acceptance Criteria*	Verificato da *Verification by* Fornitore *Supplier* Nome/firma/data *Name/sign/date*		TPIA Nome/firma/data *Name/sign/date*		ENEA Nome/firma/data *Name/sign/date*		W Nome/firma/data *Name/sign/date*		Registrazione (rapporto, NCR, …) *Records (report, NCR, …)*	Osservazioni *Observations*
1.	**PREPARAZIONE COMPONENTI** ***COMPONENTS PREPARATION***	SPT-JT60SA-01 Rev.0 664RM13952 164RM14122			*		*		*		*			
1.1	Controllo componenti e materiali Controllo documentazione e certificati *Check of components and materials* *Check of documents and certificates*	Certificati materiali *Material certificates*			M						N.A.	/		
1.2	Preparazione delle superfici dei componenti: a) sgrassaggio con soluzione alcalina in ultrasuoni b) sabbiatura con “Corindone” bianco c) lavaggio in acqua demineralizzata in ultrasuoni d) asciugatura con azoto secco pulito Controllo visivo *Components surface preparation:* *a) degreasing with alkaline solution in ultrasonic bath* *b) grinding with white “Corindone”* *c) rinsing with deminaralized water in ultrasonic bath* *d) drying with clean and dry nitrogen* *Visual check*	664RM13952		See ref. dwg. Nota/*Remark* #4: Ra=6um	@						N.A.	/		
1.3	Assemblare i componenti e incollare con “Stycast 2850 FT” *Pipe assembling and gluing with “Stycast 2850 FT”*				@						N.A.	/		
1.4	Controllo visivo e dimensionale *Visual and dimensional check*	664RM13952		See ref. dwg.	M						N.A.	/		
1.5	Avvolgimento con filo di vetro impregnato con resina eposidica *Winding with glass rowing impregnated with epoxy resin (wet winding)*				@						N.A.	/		
1.6	Controllo visivo e dimensionale *Visual and dimensional check*	664RM13952		See ref. dwg.	M						N.A.	/		

PIANO DI CONTROLLO – Isolatore elettrico (serie)
CONTROL PLAN – Insulation Breaker (series)

Doc. Nr.	QCP-JT60TF-ASG-90.13952-S	Rev. Nr. *Issue Nr.*	0	DMS#		Foglio *Sheet*	3	di *of*	3

Item No.	Attività (fabbricazione, ispezione, …) *Activity (manufacture, inspection, …)*	Documento di Riferimento *Reference Document*	Norma *Standard*	Criterio di accettazione *Acceptance Criteria*	Verificato da *Verification by* Fornitore *Supplier* Nome/firma/data *Name/sign/date*		TPIA Nome/firma/data *Name/sign/date*		ENEA Nome/firma/data *Name/sign/date*		W Nome/firma/data *Name/sign/date*		Registrazione (rapporto, NCR, …) *Records (report, NCR, …)*	Osservazioni *Observations*
2.	**Controlli finali di accettazione** ***Final acceptance test***	SPT-JT60SA-01 Rev.0 664RM13952 164RM14122												
2.1	n.5 cicli termici in azoto liquido (293K – 77K – 293K) con gradiente 30 K/h e mantenimento in temperatura per 10 min *n.5 thermal cycles in L-N_2 (293K – 77K – 293K) with temperature gradient of 30 K/h and flat top of 10 min*				@ R				N		N.A.	/		
2.2	Test di accettatione: a) test in pressione con azoto a 3.0MPa (30bar) / 30min b) test di tenuta a vuoto in He a 2.5MPa (25bar) c) test di isolamento elettrico a 3.8kV / 1min *Acceptance test:* *a) pressure test with nitrogen at 3.0MPa (30bar) / 30min* *b) He leak test at 2.5MPa (25bar)* *c) electrical insulation test at 3.8kV / 1min*			a) Nessuna perdita rilevabile, controllo decadimento pressione *No visual leak detected, check of pressure decay* b) He leak rate ≤1.0E-9 Pa·m^3/s (≤1.0E-8 mbar·lt/s) c) R>1.0 GOhm	R				N		N.A.	/		
2.3	Taglio a misura in lunghezza. Controllo dimensionale lunghezza totale. *Cutting to final length. Dimensional check of total length*	664RM13952		See ref. dwg.	R						N.A.	/		
3.	**Documentazione QA** ***QA dossier***													
3.1	Controllo finale documentazione *QA dossier final verification*				D				D		N.A.	/		

DIMENSIONS RELATE TO ROOM TEMPERATURE (293K)

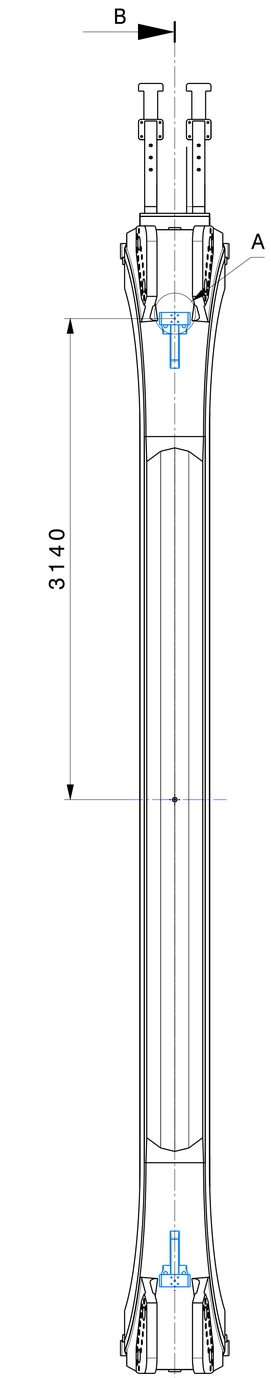

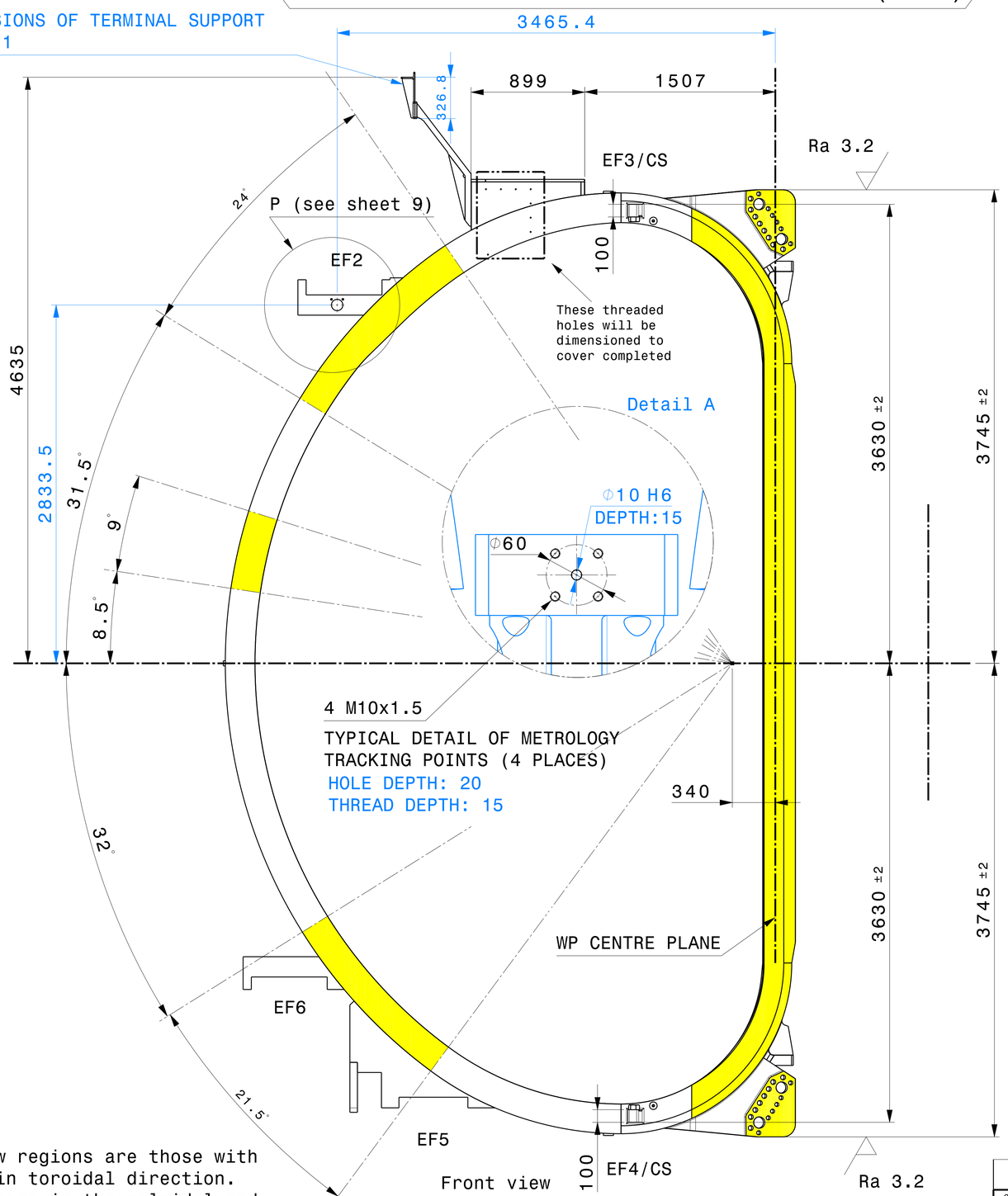

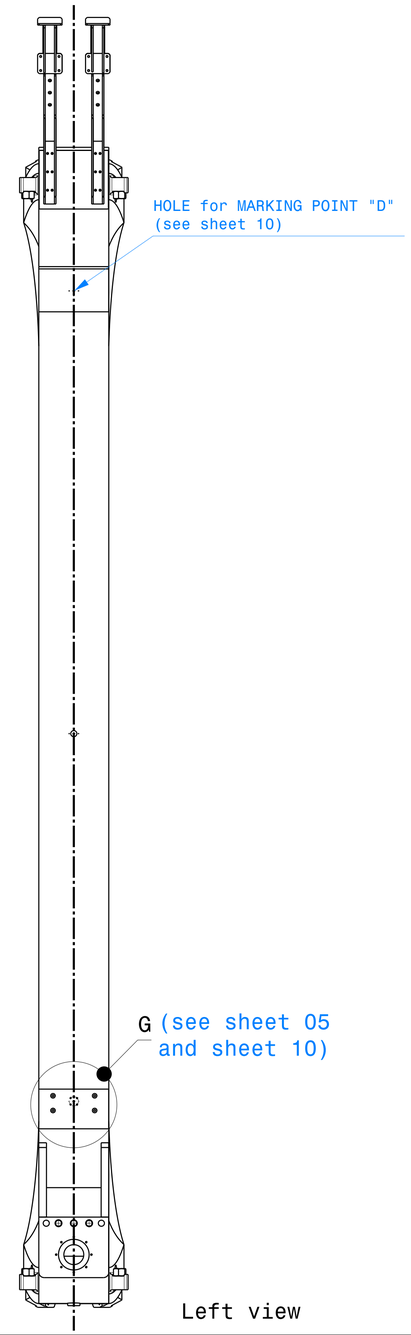

-The yellow regions are those with allowance in toroidal direction. For allowances in the poloidal and radial direction refer to drawings 010301-503000, 010301-503001, 010301-503003

Final location & detail of metrology tracking points to be confirmed after consultation with JAEA

NOTE:
- DIN ISO 2768-1 & 2768-2 GENERAL MEDIUM TOLERANCE CLASS FOR ALL MACHINING UNLESS OTHERWISE SPECIFIED

Ref to 3D CatProduct: 010202-203200_06

CONFIDENTIAL UNLESS AUTHORISED
The information on this drawing is confidential under the terms of the BA agreement.This information shall not be transmitted to anyone who is not authorised to receive it.

APPROVED BY	A.CUCCHIARO
REVIEWED BY	
CHECKED BY	
CONTROLLED BY	G.M.POLLI
DRAWN BY	G. BROLATTI
REV DATE	17-12-2012
F I	20-01-2011
SCALE	
CUSTOMER:	Fusion-for-Energy
DRAWING TITLE	TF COIL MACHINING DETAIL INNER-OUTER LEG
CODE ENEA ID:	DD-JT60TF-NCO
SHEET SIZE	A1
FIRST ANGLE PROJECTION	
WBS 3 LEVELS	01 02 02
Drawing Number	503200
SHEET	01 /11
REVISION	06
MATURITY	

DIMENSIONS RELATE TO ROOM TEMPERATURE (293K)

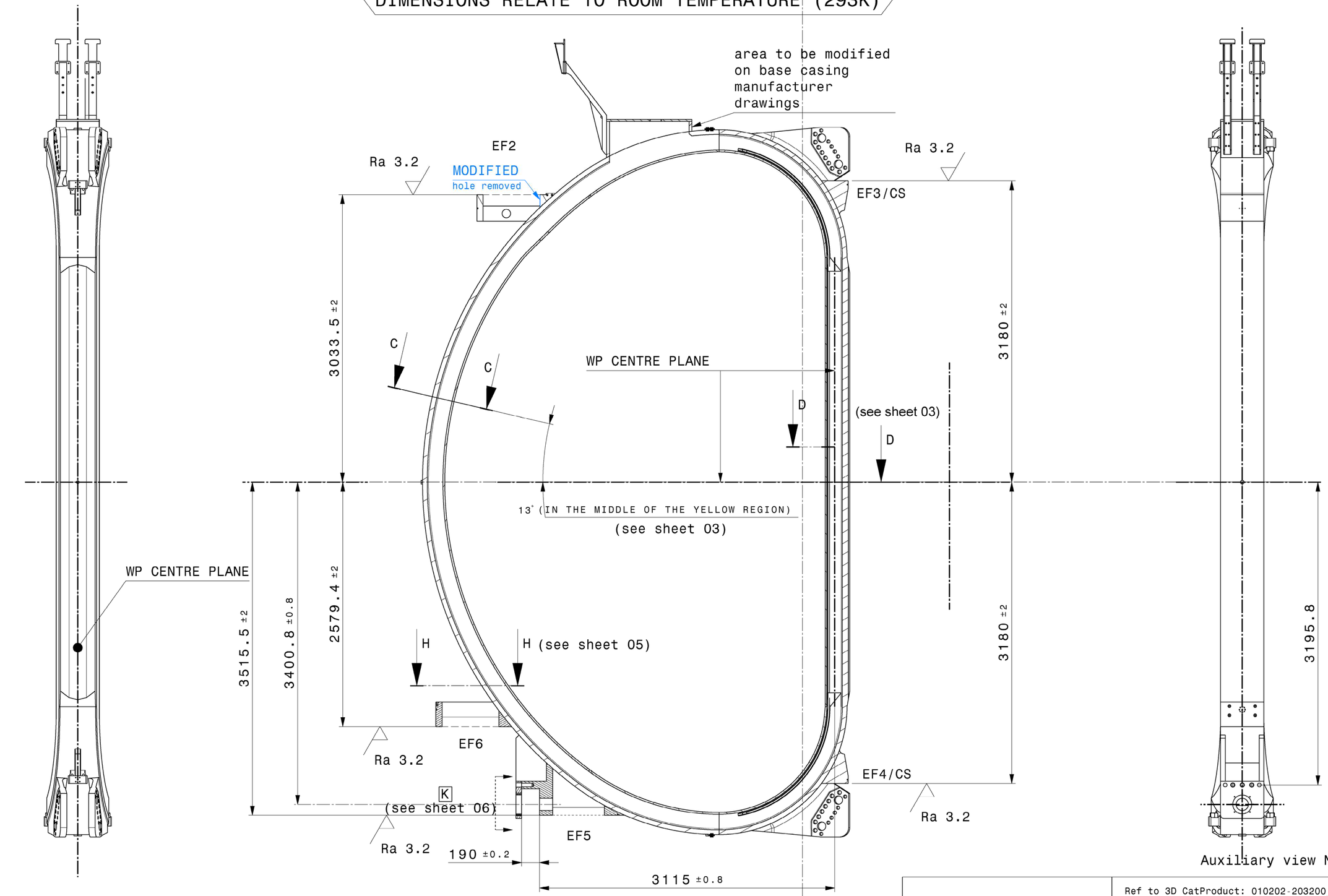

NOTE:
- DIN ISO 2768-1 & 2768-2 GENERAL MEDIUM TOLERANCE CLASS FOR ALL MACHINING UNLESS OTHERWISE SPECIFIED

Ref to 3D CatProduct: 010202-203200_06

CONFIDENTIAL UNLESS AUTHORISED
The information on this drawing is confidential under the terms of the BA agreement.This information shall not be transmitted to anyone who is not authorised to receive it.

APPROVED BY	A.CUCCHIARO
REVIEWED BY	
CHECKED BY	
CONTROLLED BY	G.M.POLLI
DRAWN BY	G. BROLATTI
REV DATE	06-11-2012
F I	20-01-2011
SCALE	
CUSTOMER:	Fusion-for-Energy
DRAWING TITLE	TF COIL MACHINING DETAIL INNER-OUTER LEG
CODE ENEA ID:	DD-JT60TF-NCO
SHEET SIZE	A1
FIRST ANGLE PROJECTION	
WBS 3 LEVELS	01 02 02
Drawing Number	503200
SHEET	02 /11
REVISION	06
MATURITY	

DIMENSIONS RELATE TO ROOM TEMPERATURE (293K)

The closures shown have only an indicative purpose, the final design of the bevel will be forwarded to casing manufacturer by ENEA on the base of the specification of the coil suppliers

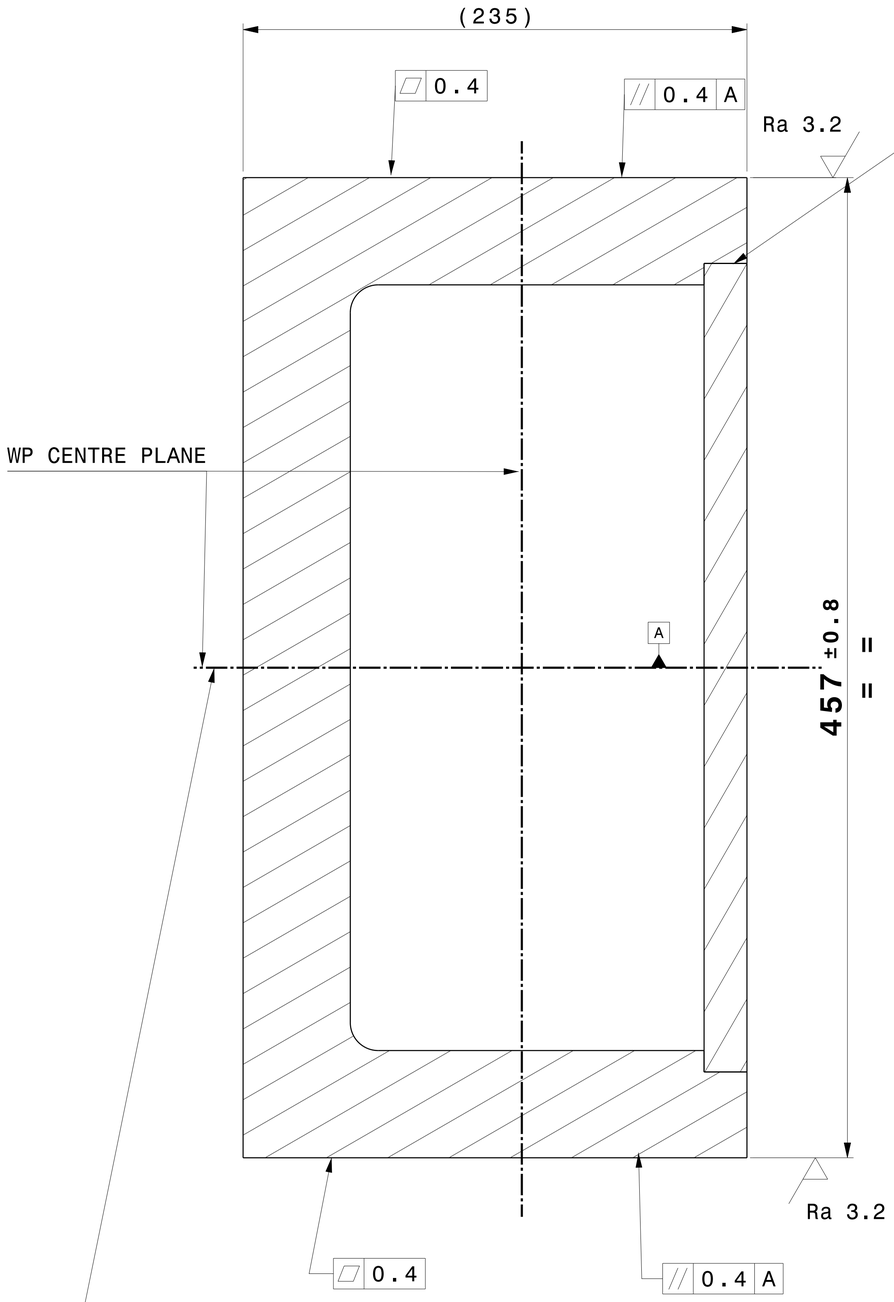

Section cut C-C (see sheet 02)

TYPICAL MACHINING SECTION CURVED LEG YELLOW REGIONS

adjustment among the white and yellow regions
Steps between yellow and white regions must be chamfered

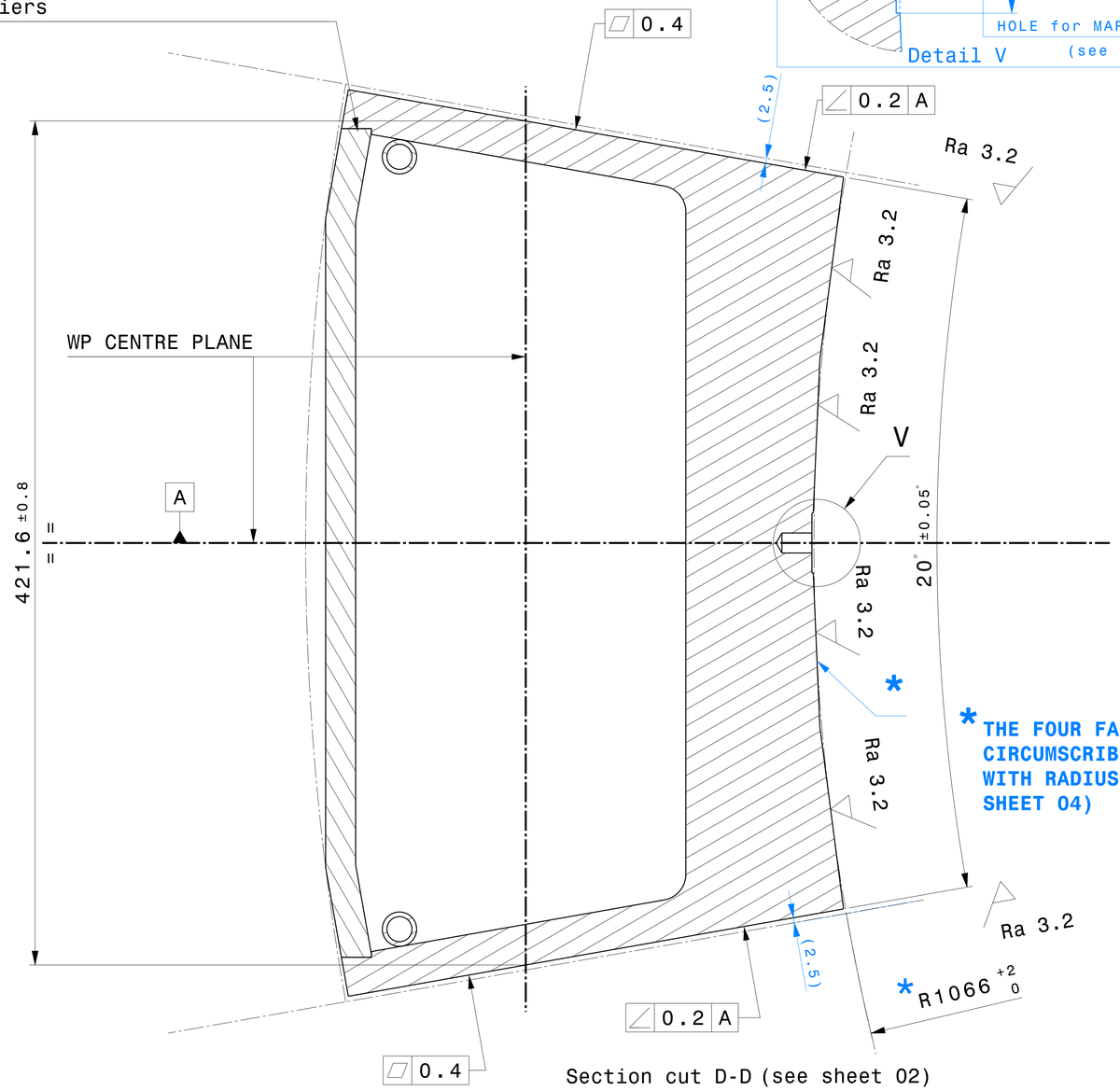

Section cut D-D (see sheet 02)

TYPICAL MACHINING SECTION STRAIGHT LEG

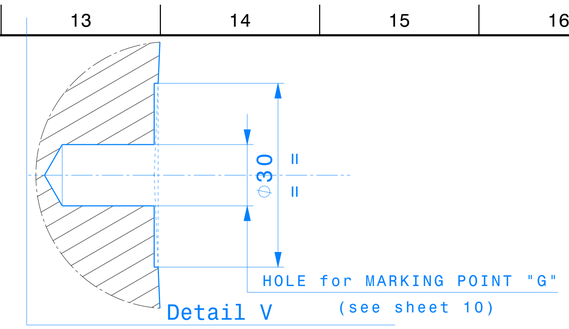

CENTRE LINE OF TF WINDING PACK AS MEASURED AFTER INSERTION

NOTE:
- DIN ISO 2768-1 & 2768-2 GENERAL MEDIUM TOLERANCE CLASS FOR ALL MACHINING UNLESS OTHERWISE SPECIFIED
- WP CENTRE PLANE DEFINED BY MARKING POINTS ON WP SURFACE

Ref to 3D CatProduct: 010202-203200_06

CONFIDENTIAL UNLESS AUTHORISED
The information on this drawing is confidential under the terms of the BA agreement.This information shall not be transmitted to anyone who is not authorised to receive it.

APPROVED BY	A.CUCCHIARO
REVIEWED BY	
CHECKED BY	
CONTROLLED BY	G.M.POLLI
DRAWN BY	G. BROLATTI
REV DATE	17-12-2012
SCALE	
20-01-2011	
CUSTOMER:	Fusion-for-Energy
DRAWING TITLE	TF COIL MACHINING DETAIL INNER-OUTER LEG
CODE ENEA ID:	DD-JT60TF-NC0
SHEET SIZE	A1
FIRST ANGLE PROJECTION	
WBS 3 LEVELS	010202
Drawing Number	503200
SHEET	03 /11
REVISION	06
MATURITY	

DIMENSIONS RELATE TO ROOM TEMPERATURE (293K)

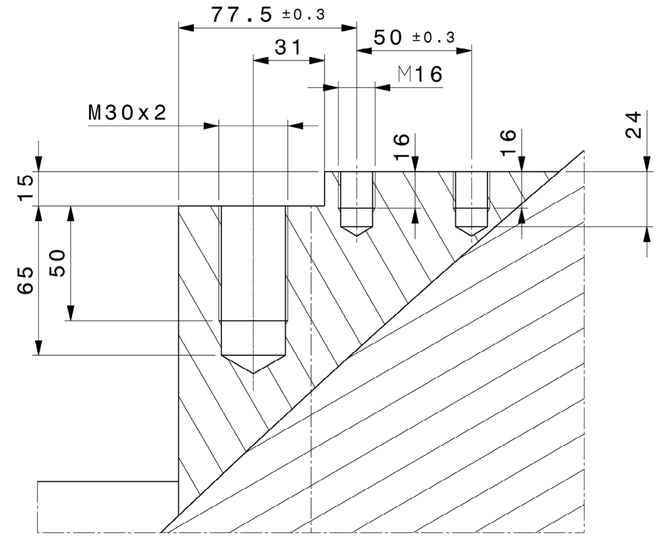

Section view E-E

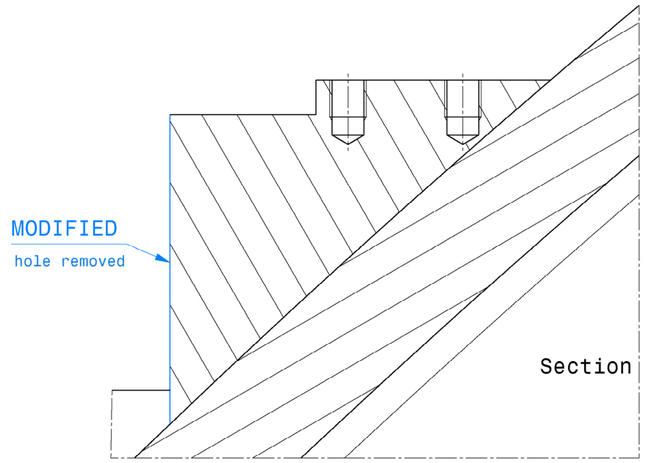

Section view U-U

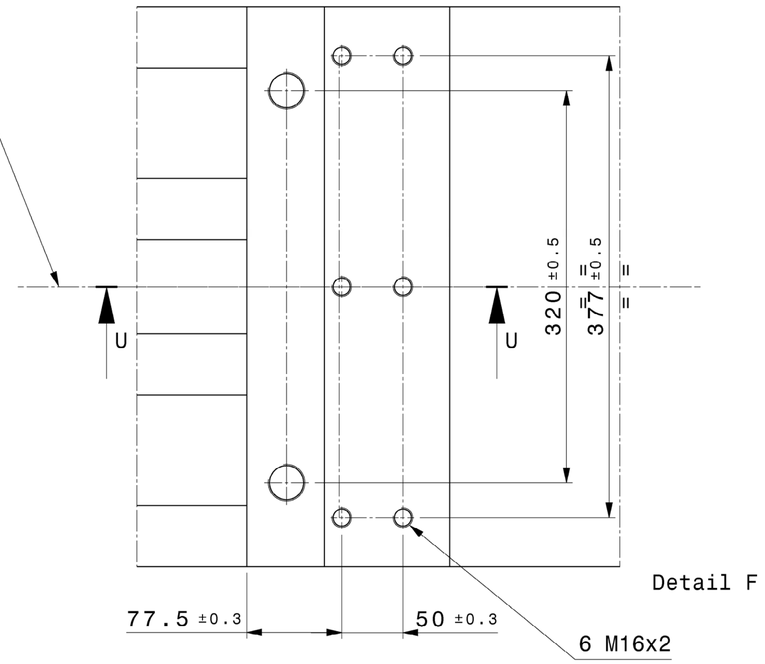

Detail F

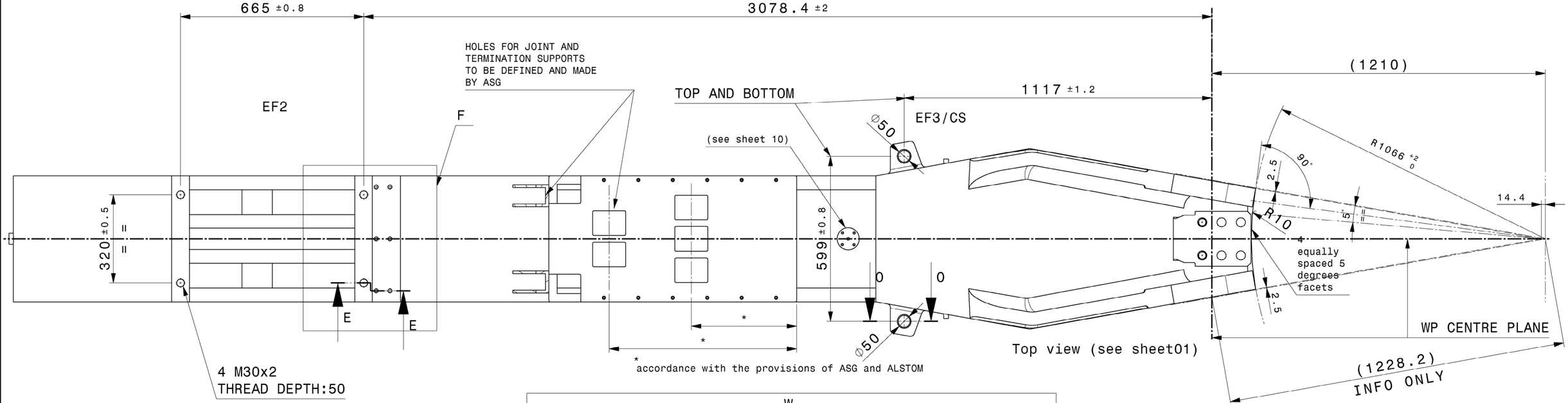

* accordance with the provisions of ASG and ALSTOM

Top view (see sheet01)

EXTENDED NUT M48 (it is not part ASG supply, but it's reported for information only)

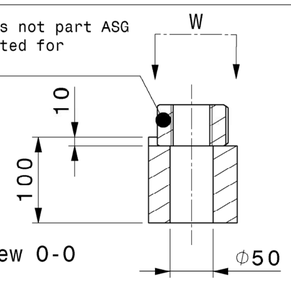

Section view 0-0

Auxiliary view W
(see sheet 06 too)

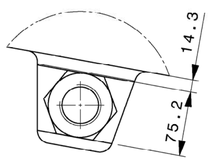

NOTE:
- DIN ISO 2768-1 & 2768-2 GENERAL MEDIUM TOLERANCE CLASS FOR ALL MACHINING UNLESS OTHERWISE SPECIFIED

Ref to 3D CatProduct: 010202-203200_06

CONFIDENTIAL UNLESS AUTHORISED
The information on this drawing is confidential under the terms of the BA agreement.This information shall not be transmitted to anyone who is not authorised to receive it.

APPROVED BY	A.CUCCHIARO
REVIEWED BY	
CHECKED BY	
CONTROLLED BY	G.M.POLLI
DRAWN BY	G. BROLATTI
REV DATE	15-04-2013
F I SCALE	20-01-2011
CUSTOMER:	Fusion-for-Energy
DRAWING TITLE	TF COIL MACHINING DETAIL INNER-OUTER LEG
CODE ENEA ID:	DD-JT60TF-NCO
SHEET SIZE	A1
FIRST ANGLE PROJECTION	
WBS 3 LEVELS	01 02 02
Drawing Number	503200
SHEET	04 /11
REVISION	06
MATURITY	

DIMENSIONS RELATE TO ROOM TEMPERATURE (293K)

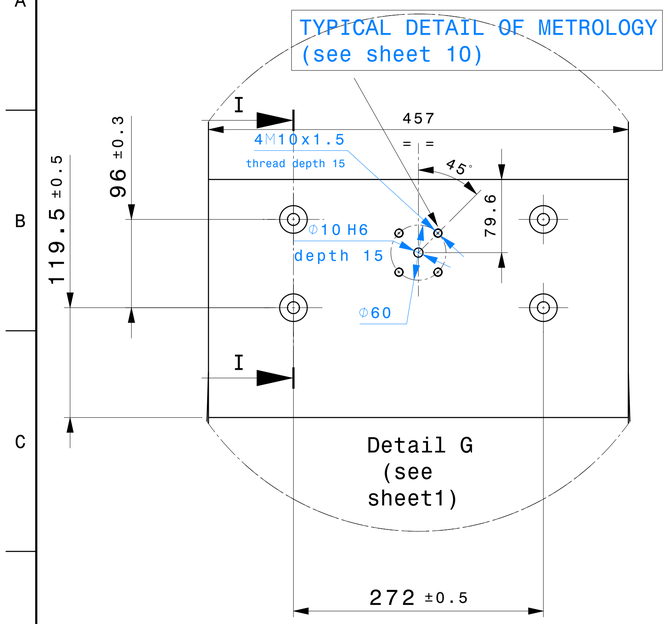

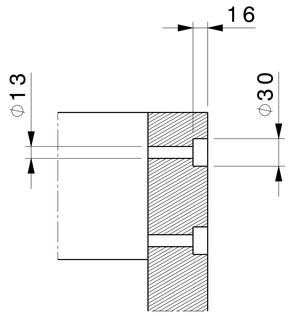

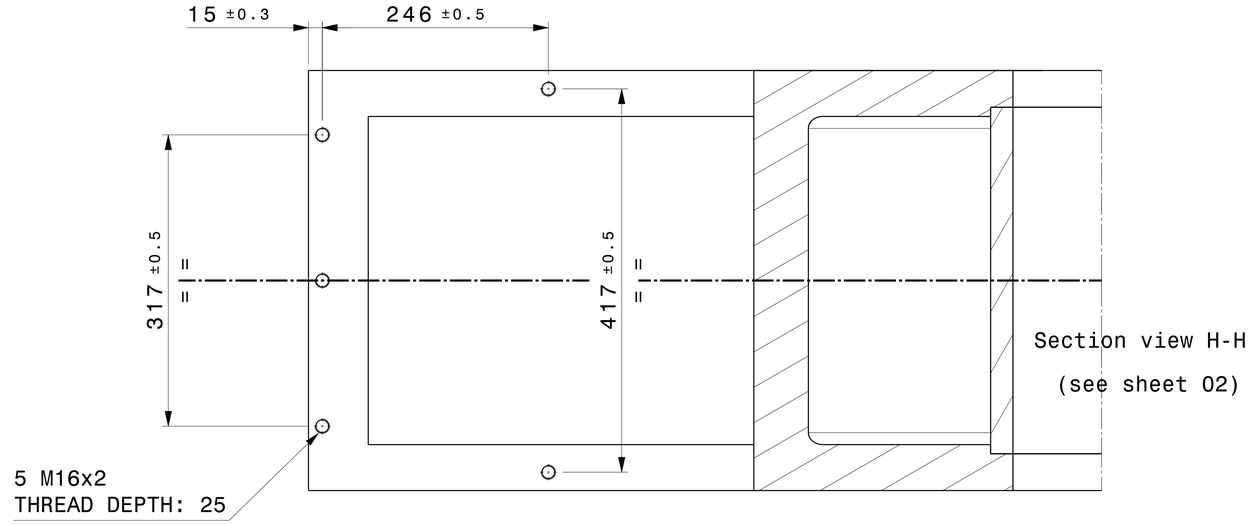

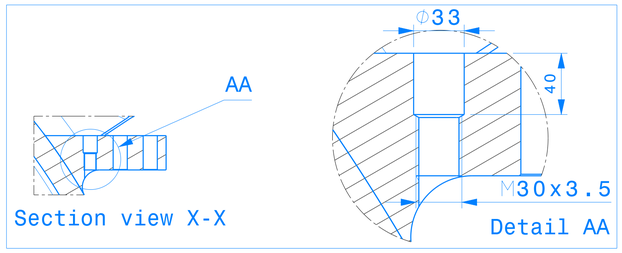

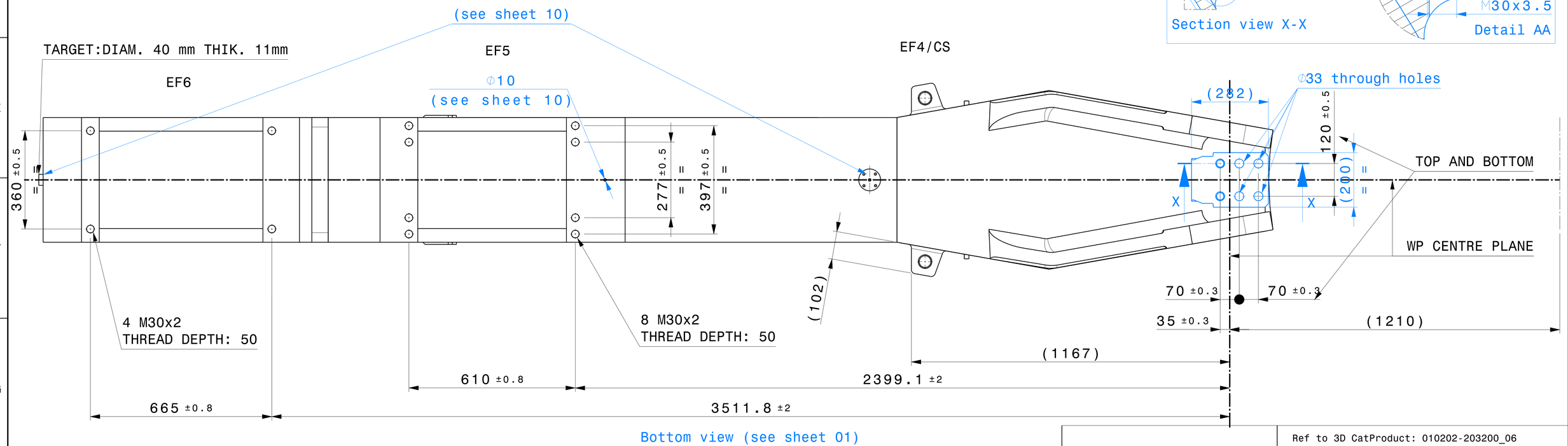

NOTE:
- DIN ISO 2768-1 & 2768-2 GENERAL MEDIUM TOLERANCE CLASS FOR ALL MACHINING UNLESS OTHERWISE SPECIFIED

Ref to 3D CatProduct: 010202-203200_06

CONFIDENTIAL UNLESS AUTHORISED
The information on this drawing is confidential under the terms of the BA agreement.This information shall not be transmitted to anyone who is not authorised to receive it.

APPROVED BY	A.CUCCHIARO
REVIEWED BY	
CHECKED BY	
CONTROLLED BY	G.M.POLLI
DRAWN BY	G. BROLATTI
REV DATE	17-12-2012
F I	20-01-2011
SCALE	
SHEET SIZE	A1
FIRST ANGLE PROJECTION	
WBS 3 LEVELS	01 02 02
Drawing Number	503200
SHEET	05 /11
REVISION	06
MATURITY	
CUSTOMER:	Fusion-for-Energy
DRAWING TITLE	TF COIL MACHINING DETAIL INNER-OUTER LEG
CODE ENEA ID:	DD-JT60TF-NC0

DIMENSIONS RELATE TO ROOM TEMPERATURE (293K)

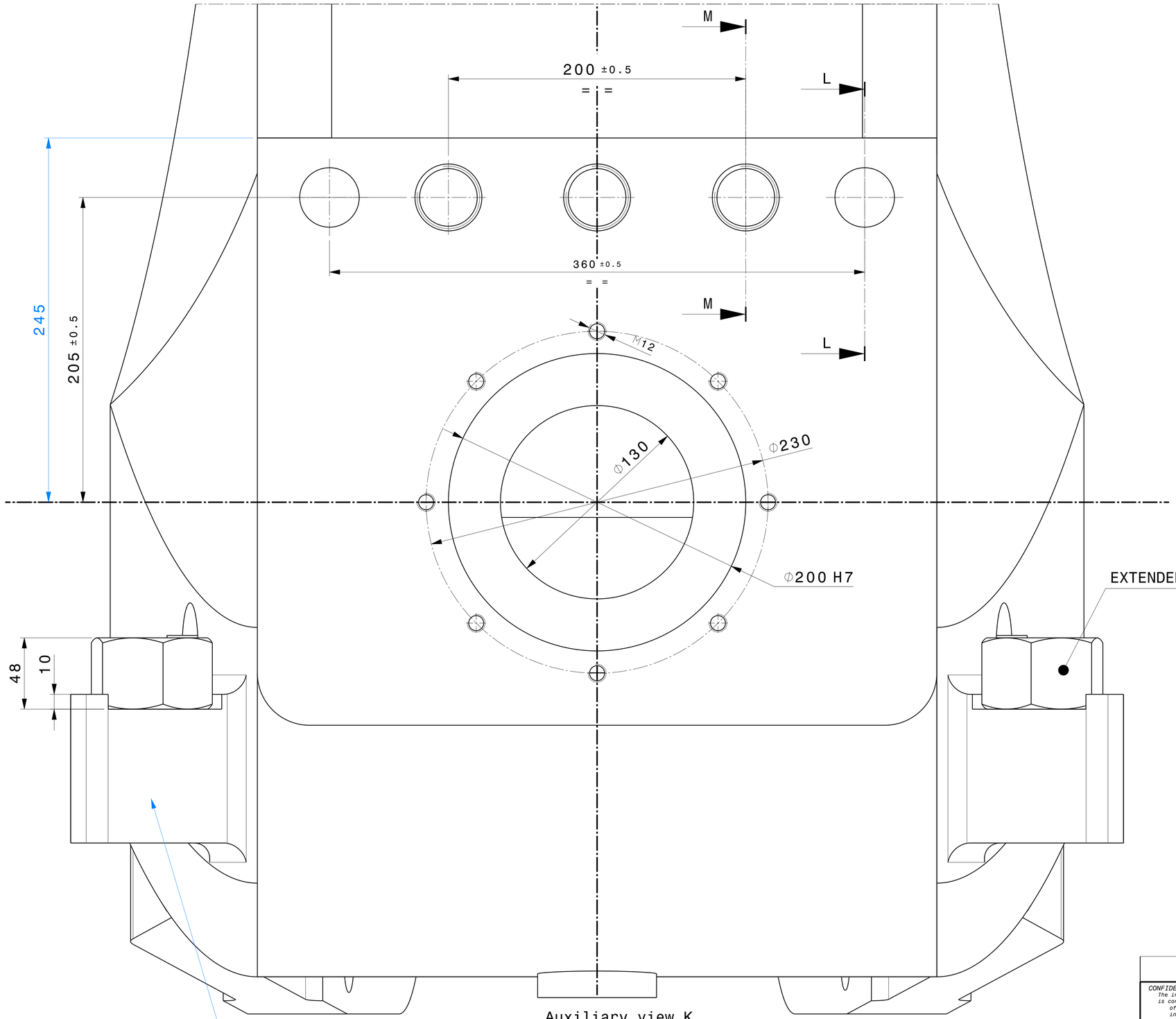

Auxiliary view K
(see sheet02)

(see view:W in sheet 04)

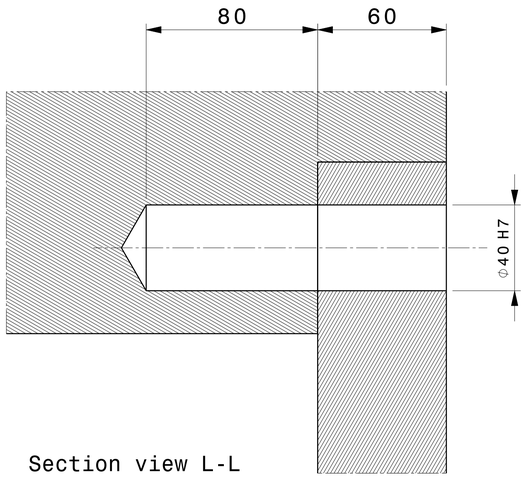

Section view L-L

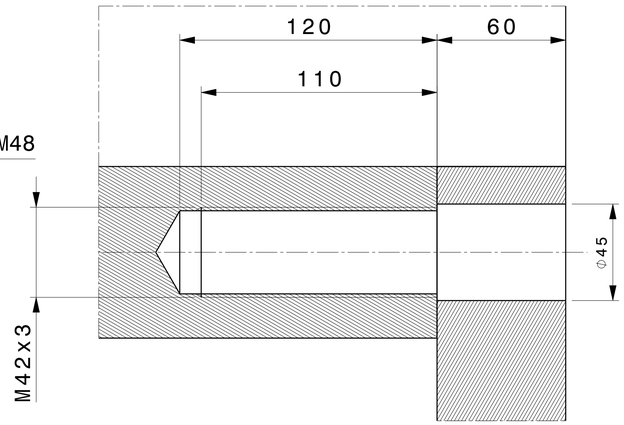

Section view M-M

NOTE:
- DIN ISO 2768-1 & 2768-2 GENERAL MEDIUM TOLERANCE CLASS FOR ALL MACHINING UNLESS OTHERWISE SPECIFIED

Ref to 3D CatProduct: 010202-203200_06

CONFIDENTIAL UNLESS AUTHORISED
The information on this drawing is confidential under the terms of the BA agreement.This information shall not be transmitted to anyone who is not authorised to receive it.

APPROVED BY	A.CUCCHIARO
REVIEWED BY	
CHECKED BY	
CONTROLLED BY	G.M.POLLI
DRAWN BY	G. BROLATTI
REV DATE	06-11-2012
F I SCALE	20-01-2011
CUSTOMER:	Fusion-for-Energy
DRAWING TITLE	TF COIL MACHINING DETAIL INNER-OUTER LEG
CODE ENEA ID:	DD-JT60TF-NC0
SHEET SIZE	A1
FIRST ANGLE PROJECTION	
WBS 3 LEVELS	010202
Drawing Number	503200
SHEET	06 /11
REVISION	04
MATURITY	

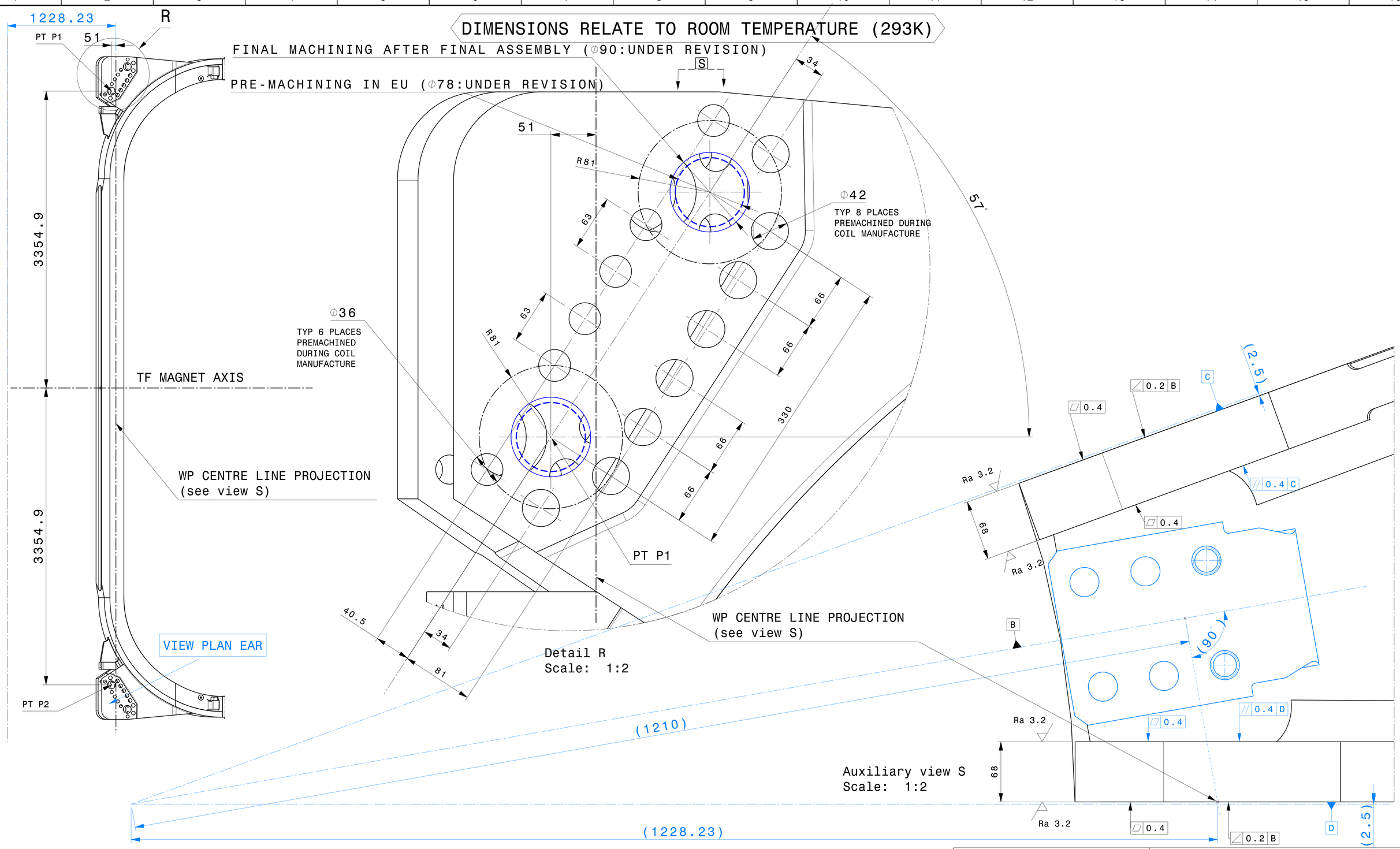

NOTE:
- DIN ISO 2768-1 & 2768-2 GENERAL MEDIUM TOLERANCE CLASS FOR ALL MACHINING UNLESS OTHERWISE SPECIFIED

Ref to 3D CatProduct: 010202-203200_06

CONFIDENTIAL UNLESS AUTHORISED
The information on this drawing is confidential under the terms of the BA agreement.This information shall not be transmitted to anyone who is not authorised to receive it.

APPROVED BY	A.CUCCHIARO
REVIEWED BY	
CHECKED BY	
CONTROLLED BY	G.M.POLLI
DRAWN BY	G. BROLATTI
REV DATE	06-11-2012
F I S	20-01-2011
SCALE	
CUSTOMER:	Fusion-for-Energy
DRAWING TITLE	TF COIL MACHINING DETAIL INNER-OUTER LEG
CODE ENEA ID:	DD-JT60TF-NC0
SHEET SIZE	A1
FIRST ANGLE PROJECTION	
WBS 3 LEVELS	01 02 02
Drawing Number	503200
SHEET	07 /11
REVISION	05
MATURITY	

DIMENSIONS RELATE TO ROOM TEMPERATURE (293K)

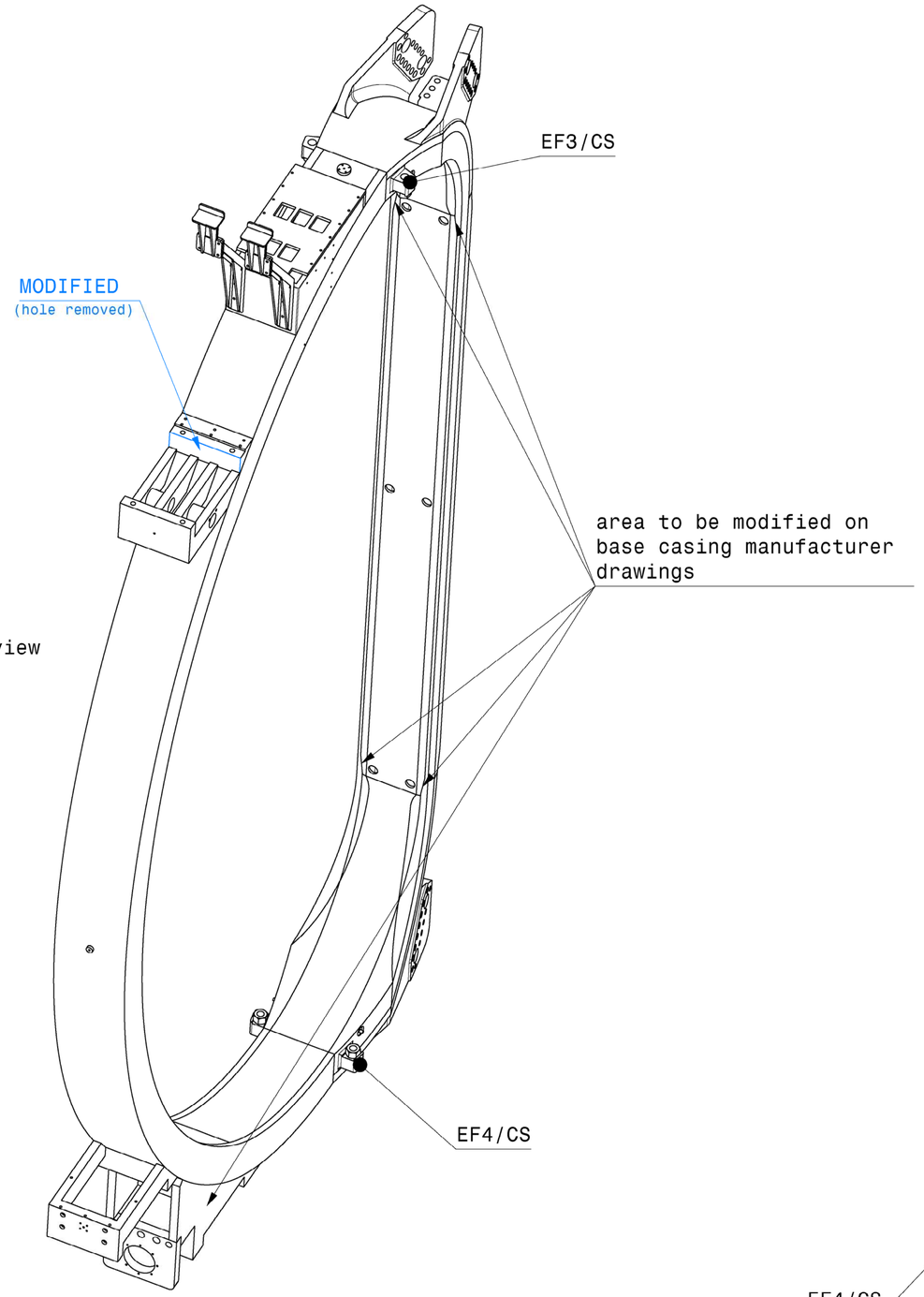

Isometric view

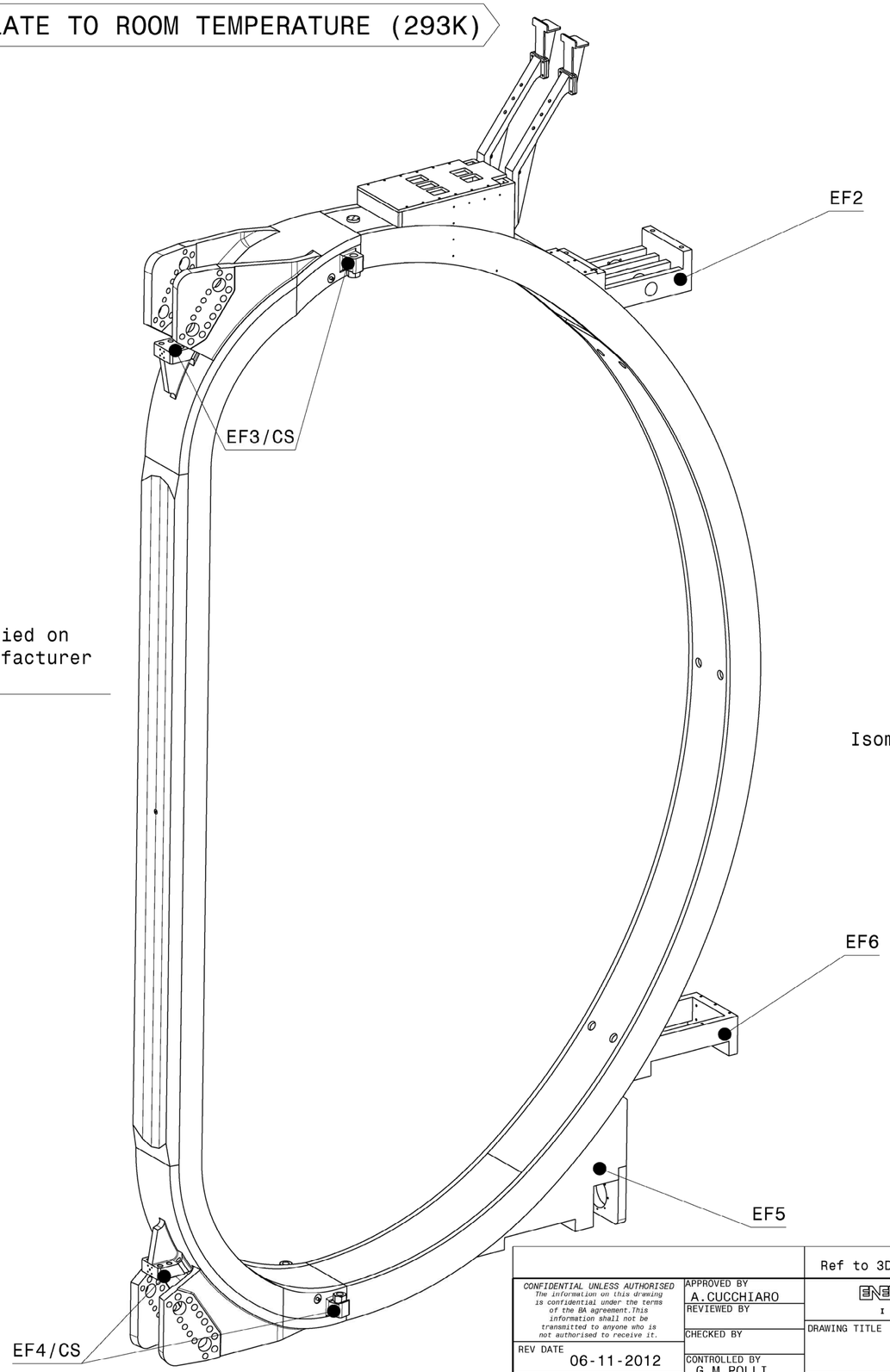

Isometric view

Ref to 3D CatProduct:010202-203200_06

CONFIDENTIAL UNLESS AUTHORISED The information on this drawing is confidential under the terms of the BA agreement.This information shall not be transmitted to anyone who is not authorised to receive it.	APPROVED BY A.CUCCHIARO	ENEA	CUSTOMER: Fusion-for-Energy
	REVIEWED BY		DRAWING TITLE TF COIL
	CHECKED BY		MACHINING DETAIL INNER-OUTER LEG
REV DATE 06-11-2012	CONTROLLED BY G.M.POLLI		
20-01-2011 SCALE	DRAWN BY G. BROLATTI	CODE ENEA ID: DD-JT60TF-NCO	

SHEET SIZE	FIRST ANGLE PROJECTION	WBS 3 LEVELS	Drawing Number	SHEET	REVISION	MATURITY
A1		01 02 02	503200	08 /11	06	

DIMENSIONS RELATE TO ROOM TEMPERATURE (293K)

EF2

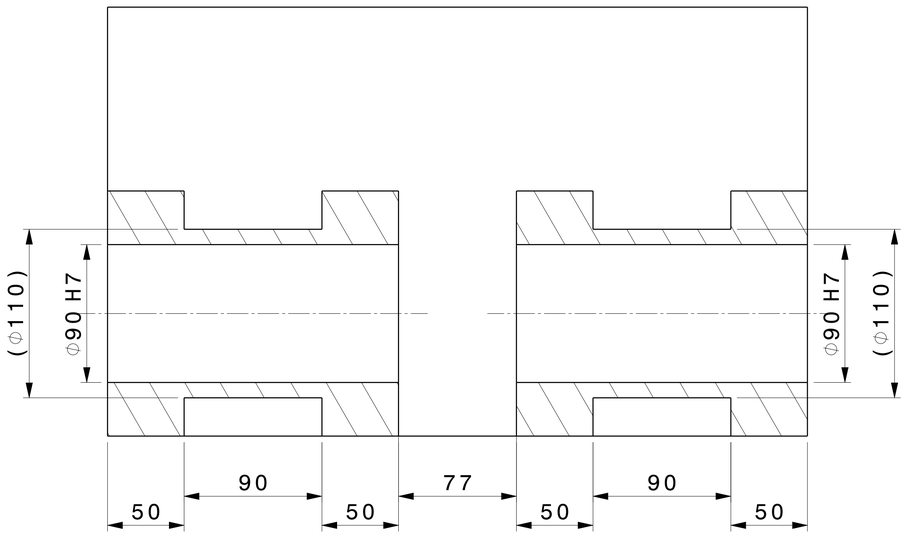

Section view T-T
Scale: 1:2

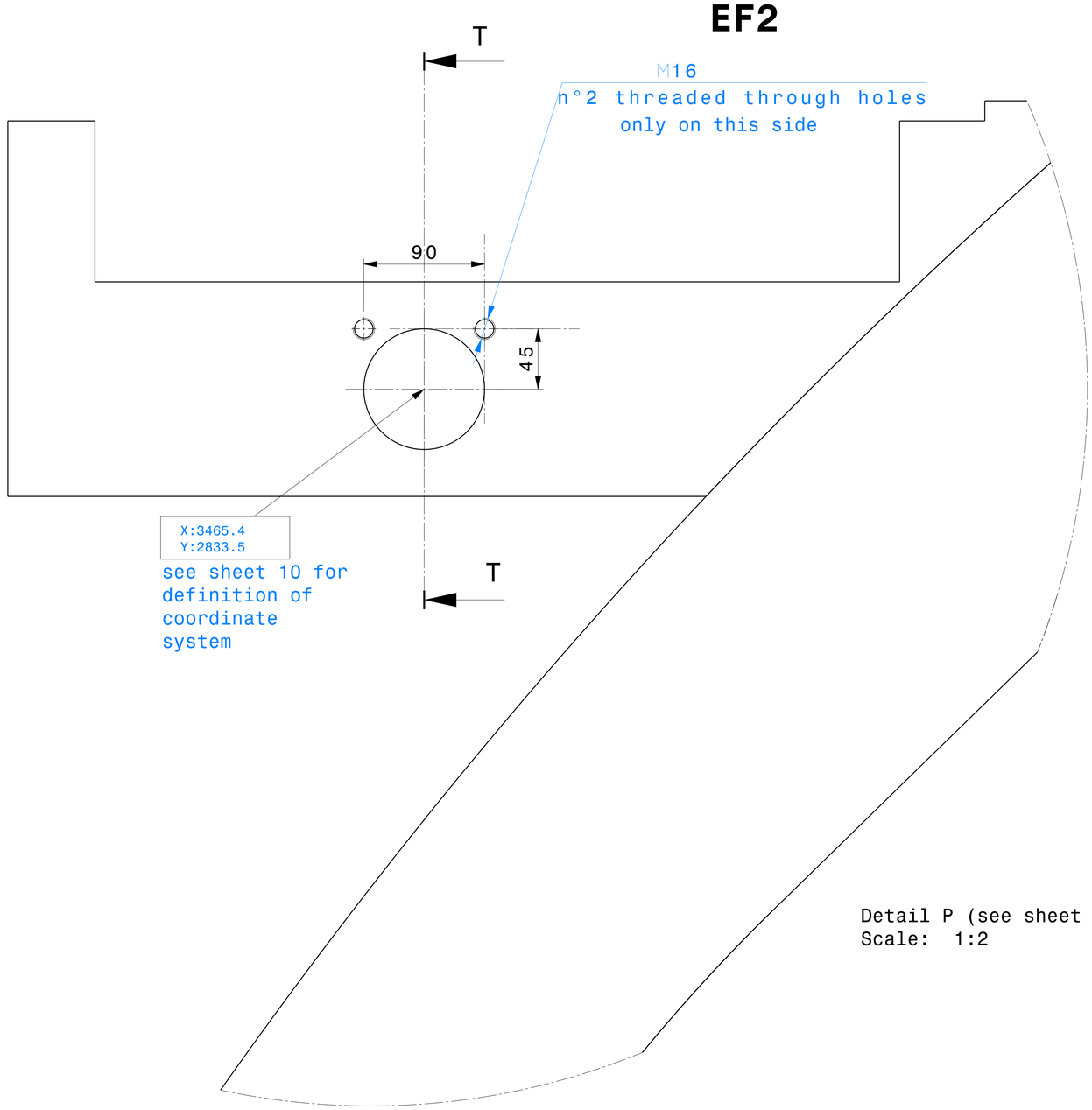

Detail P (see sheet 1)
Scale: 1:2

NOTE:
- DIN ISO 2768-1 & 2768-2 GENERAL MEDIUM TOLERANCE CLASS FOR ALL MACHINING UNLESS OTHERWISE SPECIFIED

Ref to 3D CatProduct: 010202-203200_06

CONFIDENTIAL UNLESS AUTHORISED
The information on this drawing is confidential under the terms of the BA agreement.This information shall not be transmitted to anyone who is not authorised to receive it.

APPROVED BY	A.CUCCHIARO
REVIEWED BY	
CHECKED BY	
CONTROLLED BY	G.M.POLLI
DRAWN BY	G. BROLATTI
REV DATE	17-12-2012
F I SCALE	20-01-2011
CUSTOMER:	Fusion-for-Energy
DRAWING TITLE	TF COIL MACHINING DETAIL INNER-OUTER LEG
CODE ENEA ID:	DD-JT60TF-NC0
SHEET SIZE	A1
FIRST ANGLE PROJECTION	
WBS 3 LEVELS	01 02 02
Drawing Number	503200
SHEET	09 /11
REVISION	03
MATURITY	

DIMENSIONS RELATE TO ROOM TEMPERATURE (293K)

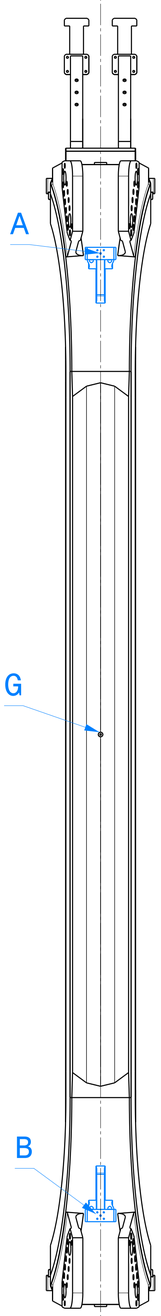

Right view
Scale: 1:20

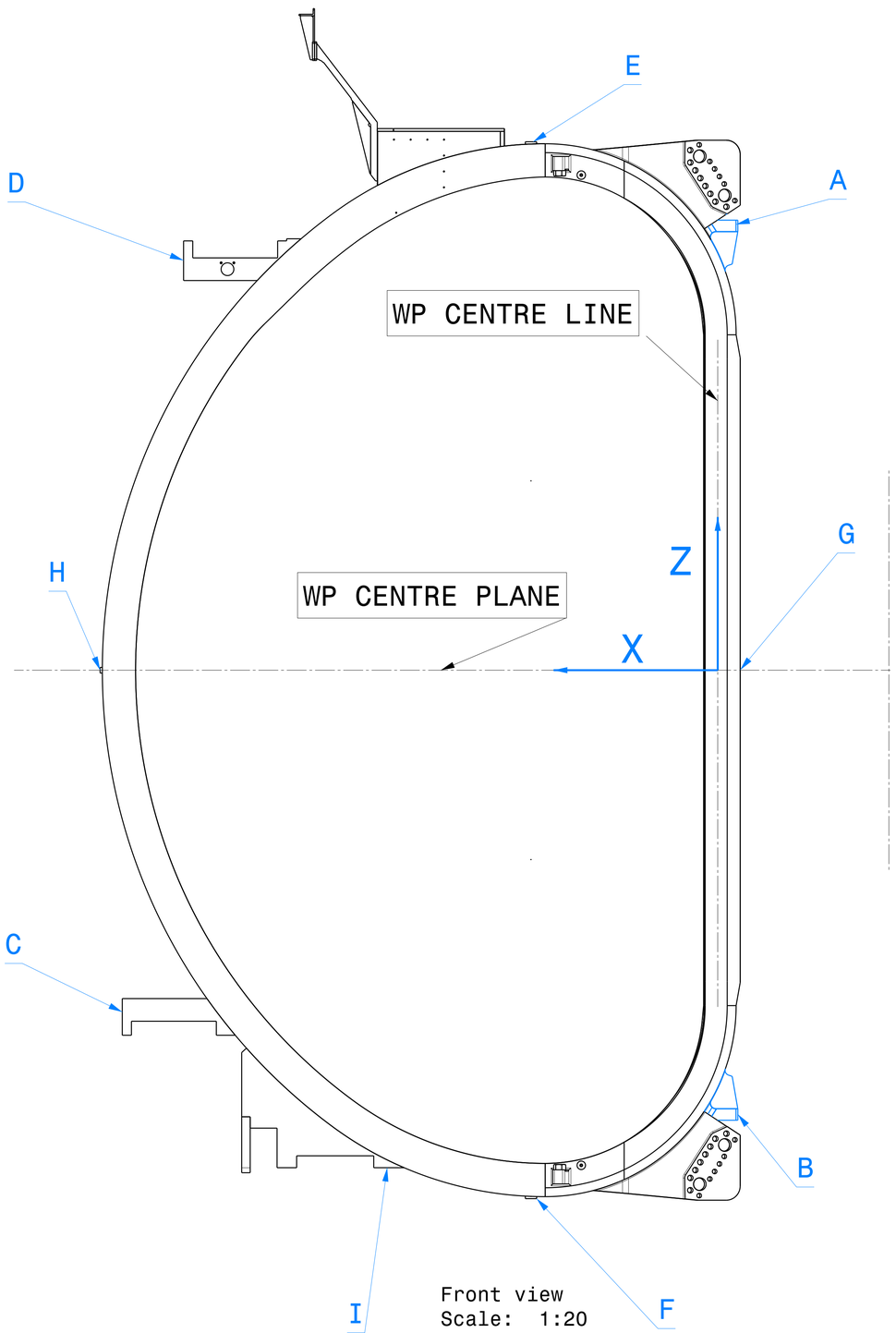

Front view
Scale: 1:20

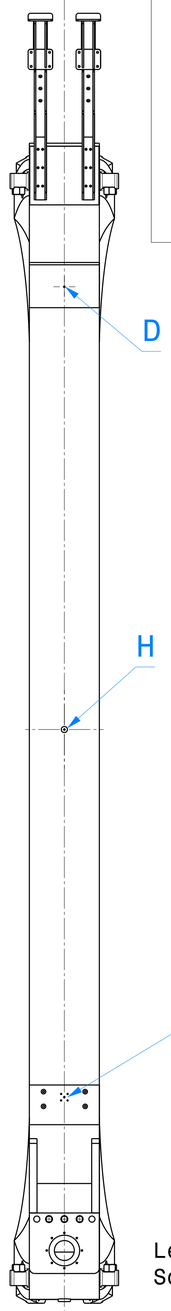

Left view
Scale: 1:20

Ra 6.3 max

Φ10 H6 DEPTH:15

(LASER TRACKER TARGET HOLE)

MARKING POINT TYPE 1

MARKING H TO BE OBTAINED BY SPOT-WELDING ON THE CASING A DISK 40 mm DIAMETER

Ra 6.3 max

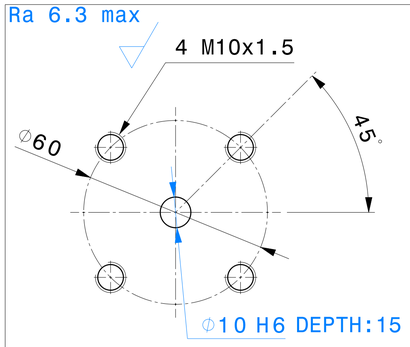

(LASER TRACKER TARGET HOLE)

MARKING POINT TYPE 2

MARKINGS E-F TO BE OBTAINED BY SPOT-WELDING ON THE CASING A DISK 80 mm DIAMETER

NOMINAL POSITION OF POINTS ON CASING

	X	Z	TYPE
A	-142.0	3140.0	2
B	-142.0	-3140.0	2
C	4209.3	-2400.0	2
D	3775.9	2890.0	1
E	1320.0	3734.0	2
F	1320.0	-3734.0	2
G	-143.0	0	1
H	4366.0	0	1
I	2290.0	-3515.5	1

FINAL POSITIONS TO BE MEASURED AFTER FABRICATION OF COIL

COORDINATES OF MARKING POINTS REFERING TO WP CENTERLINE

NOTE:
- DIN ISO 2768-1 & 2768-2 GENERAL MEDIUM TOLERANCE CLASS FOR ALL MACHINING UNLESS OTHERWISE SPECIFIED

Ref to 3D CatProduct: 010202-203200_06

CONFIDENTIAL UNLESS AUTHORISED
The information on this drawing is confidential under the terms of the BA agreement.This information shall not be transmitted to anyone who is not authorised to receive it.

APPROVED BY: A.CUCCHIARO
REVIEWED BY:
CHECKED BY:
CONTROLLED BY: G.M.POLLI
DRAWN BY: G. BROLATTI

REV DATE: 17-12-2012
F I 20-01-2011
SCALE

CUSTOMER: Fusion-for-Energy

DRAWING TITLE: TF COIL
MACHINING DETAIL INNER-OUTER LEG

CODE ENEA ID: DD-JT60TF-NC0

SHEET SIZE: A1
FIRST ANGLE PROJECTION
WBS 3 LEVELS: 01 02 02
Drawing Number: 503200
SHEET: 10 /11
REVISION: 01
MATURITY:

DIMENSIONS RELATE TO ROOM TEMPERATURE (293K)

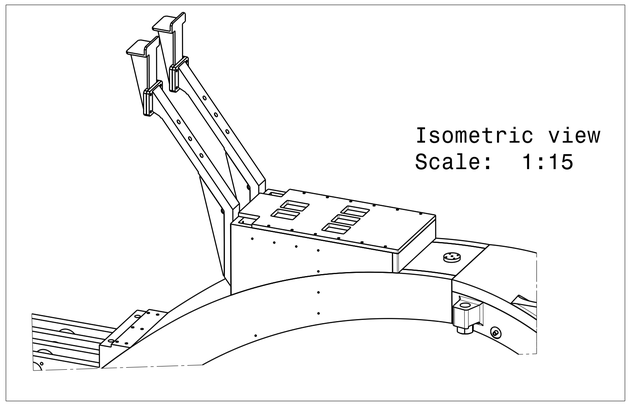

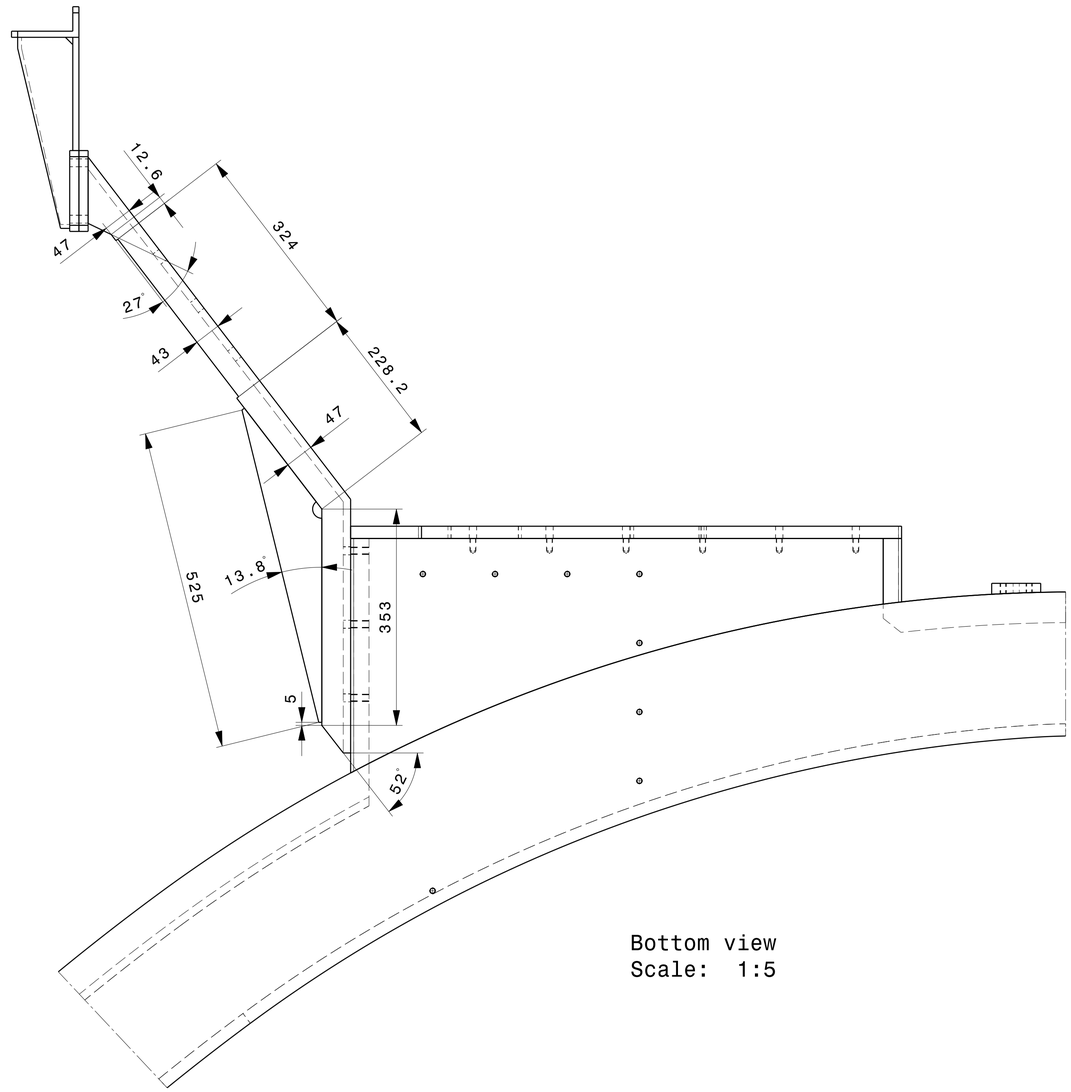

Bottom view
Scale: 1:5

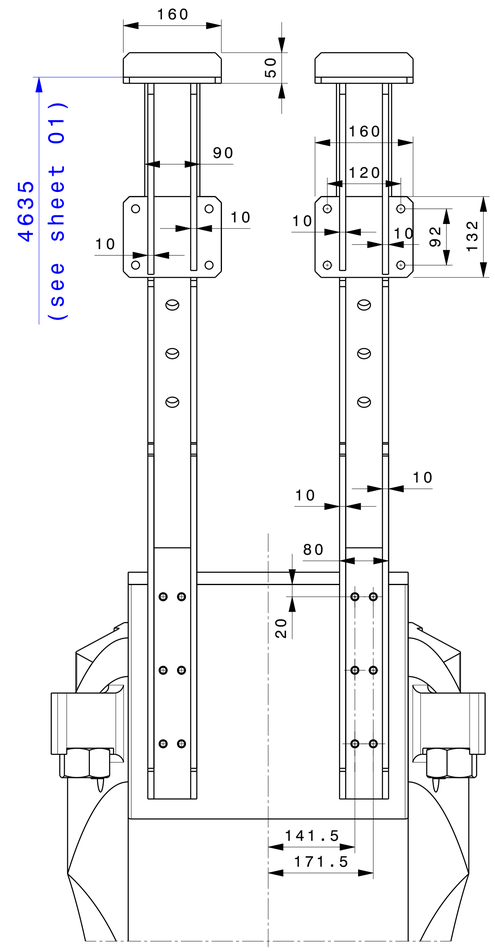

Auxiliary view Y
Scale: 1:5

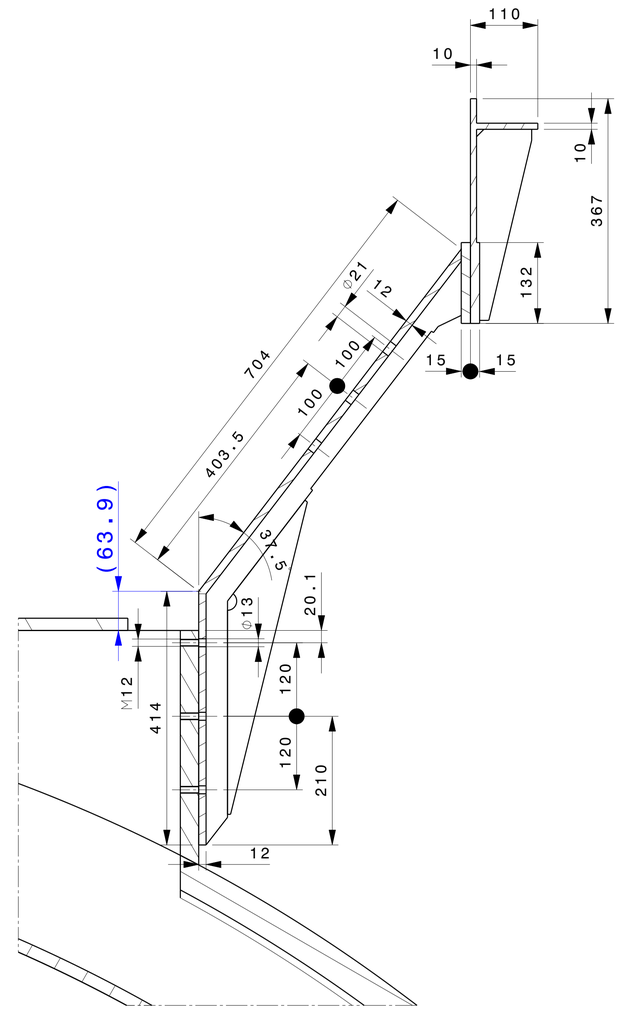

Section view Z-Z
Scale: 1:5

NOTE:
- DIN ISO 2768-1 & 2768-2 GENERAL MEDIUM TOLERANCE CLASS FOR ALL MACHINING UNLESS OTHERWISE SPECIFIED

Ref to 3D CatProduct: 010202-203200_06

CONFIDENTIAL UNLESS AUTHORISED
The information on this drawing is confidential under the terms of the BA agreement.This information shall not be transmitted to anyone who is not authorised to receive it.

APPROVED BY	A.CUCCHIARO
REVIEWED BY	
CHECKED BY	
CONTROLLED BY	G.M.POLLI
DRAWN BY	G. BROLATTI
REV DATE	06-11-2012
F I SCALE	20-01-2011
CUSTOMER:	Fusion-for-Energy
DRAWING TITLE	TF COIL MACHINING DETAIL INNER-OUTER LEG
CODE ENEA ID:	DD-JT60TF-NC0
SHEET SIZE	A1
FIRST ANGLE PROJECTION	
WBS 3 LEVELS	01 02 02
Drawing Number	503200
SHEET	11 /11
REVISION	00
MATURITY	

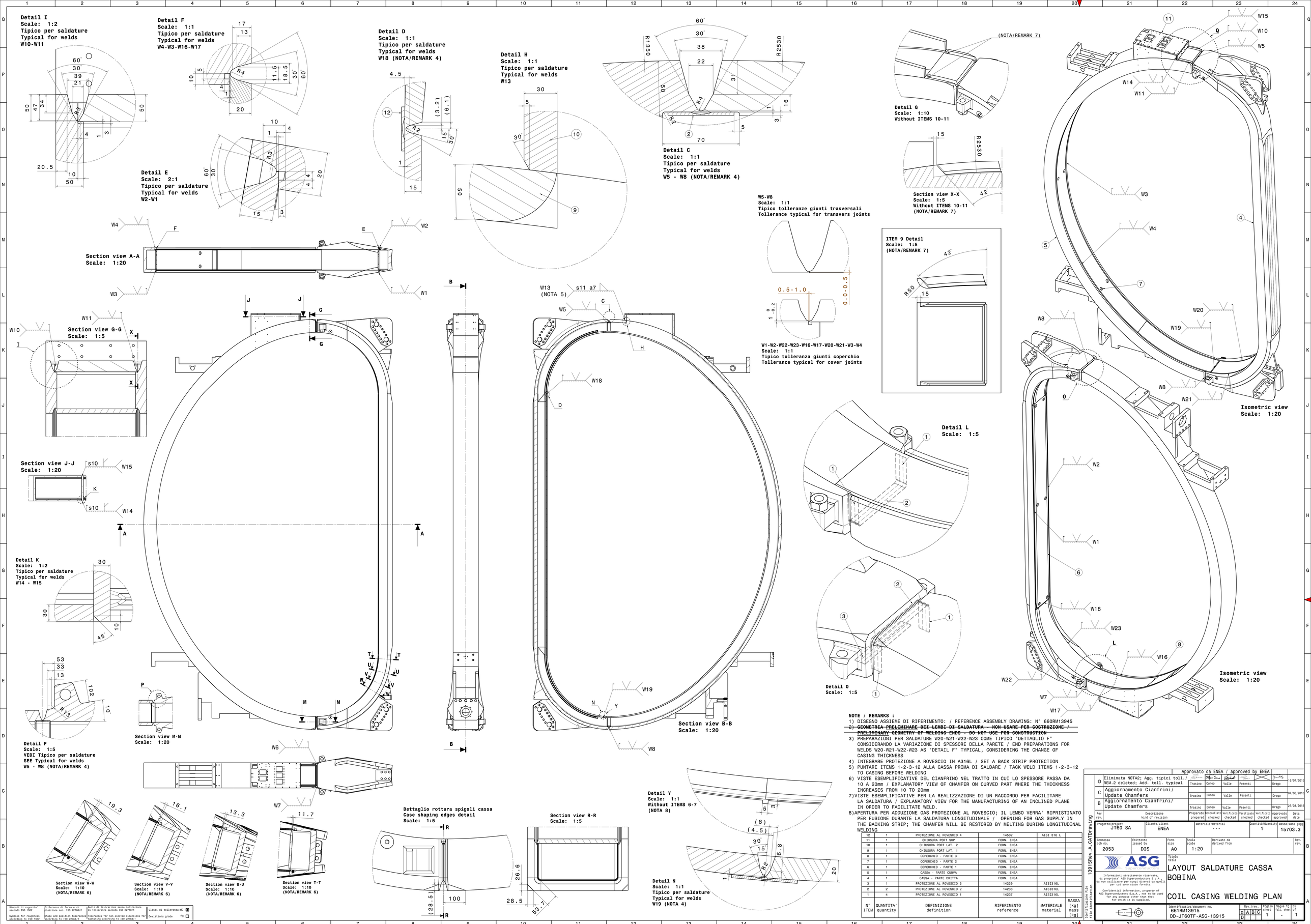

NOTE / REMARKS :

1) DISEGNO ASSIEME DI RIFERIMENTO: / REFERENCE ASSEMBLY DRAWING: N° 660RM13945
2) ~~GEOMETRIA PRELIMINARE DEI LEMBI DI SALDATURA - NON USARE PER COSTRUZIONE / PRELIMINARY GEOMETRY OF WELDING ENDS - DO NOT USE FOR CONSTRUCTION~~
3) PREPARAZIONI PER SALDATURE W20-W21-W22-W23 COME TIPICO 'DETTAGLIO F' CONSIDERANDO LA VARIAZIONE DI SPESSORE DELLA PARETE / END PREPARATIONS FOR WELDS W20-W21-W22-W23 AS 'DETAIL F' TYPICAL, CONSIDERING THE CHANGE OF CASING THICKNESS
4) INTEGRARE PROTEZIONE A ROVESCIO IN A316L / SET A BACK STRIP PROTECTION
5) PUNTARE ITEMS 1-2-3-12 ALLA CASSA PRIMA DI SALDARE / TACK WELD ITEMS 1-2-3-12 TO CASING BEFORE WELDING
6) VISTE ESEMPLIFICATIVE DEL CIANFRINO NEL TRATTO IN CUI LO SPESSORE PASSA DA 10 A 20mm / EXPLANATORY VIEW OF CHAMFER ON CURVED PART WHERE THE THICKNESS INCREASES FROM 10 TO 20mm
7) VISTE ESEMPLIFICATIVE PER LA REALIZZAZIONE DI UN RACCORDO PER FACILITARE LA SALDATURA / EXPLANATORY VIEW FOR THE MANUFACTURING OF AN INCLINED PLANE IN ORDER TO FACILITATE WELD.
8) APERTURA PER ADDUZIONE GAS PROTEZIONE AL ROVESCIO; IL LEMBO VERRA' RIPRISTINATO PER FUSIONE DURANTE LA SALDATURA LONGITUDINALE / OPENING FOR GAS SUPPLY IN THE BACKING STRIP; THE CHAMFER WILL BE RESTORED BY MELTING DURING LONGITUDINAL WELDING

N° ITEM	QUANTITA' quantity	DEFINIZIONE definition	RIFERIMENTO reference	MATERIALE material	MASSA [kg] mass [kg]
12	1	PROTEZIONE AL ROVESCIO 4	14502	AISI 316 L	
11	1	CHIUSURA PORT SUP	FORN. ENEA		
10	1	CHIUSURA PORT LAT. 2	FORN. ENEA		
9	1	CHIUSURA PORT LAT. 1	FORN. ENEA		
8	1	COPERCHIO - PARTE 3	FORN. ENEA		
7	1	COPERCHIO - PARTE 2	FORN. ENEA		
6	1	COPERCHIO - PARTE 1	FORN. ENEA		
5	1	CASSA - PARTE CURVA	FORN. ENEA		
4	1	CASSA - PARTE DRITTA	FORN. ENEA		
3	1	PROTEZIONE AL ROVESCIO 3	14239	AISI316L	
2	2	PROTEZIONE AL ROVESCIO 2	14238	AISI316L	
1	4	PROTEZIONE AL ROVESCIO 1	14237	AISI316L	

Rev. rev.	Descrizione kind of revision	Preparato prepared	Controllato checked	Verificato checked	Verificato checked	Verificato checked	Approvato approved	Data date
D	Eliminata NOTA2; Agg. tipici toll./ REM.2 deleted; Add. toll. typical	Trasino	Cuneo	Valle	Pesenti		Drago	16/07/2013
C	Aggiornamento Cianfrini/ Update Chamfers	Trasino	Cuneo	Valle	Pesenti		Drago	07/06/2013
B	Aggiornamento Cianfrini/ Update Chamfers	Trasino	Cuneo	Valle	Pesenti		Drago	27/03/2013

Approvato da ENEA / approved by ENEA

Progetto/project	Cliente/client	Materiale/Material	Quantità/Quantity	Massa/Mass [kg]
JT60 SA	ENEA	---	1	15703.3

Commessa job no.	Emittente issued by	Form. size	Scala scale	Derivato da derived from	Rev. rev.
2053	DIS	A0	1:20		

ASG SUPERCONDUCTORS

Informazioni strettamente riservate, di proprieta' ASG Superconductors S.p.A., da non utilizzare per scopi diversi da quelli per cui sono state fornite.

Confidential information, property of ASG Superconductors S.p.A., not to be used for any purpose other than that for which it is supplied.

Titolo title

LAYOUT SALDATURE CASSA BOBINA

COIL CASING WELDING PLAN

Identificativo/document no.
661RM13915
DD-JT60TF-ASG-13915

Rev./rev. O A B C D

Foglio sheet 1 | Segue fg. foll. sheet - | Di of 1

Identificazione file
File identification
139156Rev.A.CATDrawing

Simboli di rugosita' secondo ISO 1302
Symbols for roughness according to ISO 1302

Tolleranze di forma e di posizione sec. ISO 22768/2
Shape and position tolerances according to ISO 22768/2

Quote di lavorazione senza indicazione di tolleranza secondo ISO 22768/1
Tolerances for non-limited dimensions for machining according to ISO 22768/1

Classi di tolleranza mK ☒
Deviations grade fK ☐

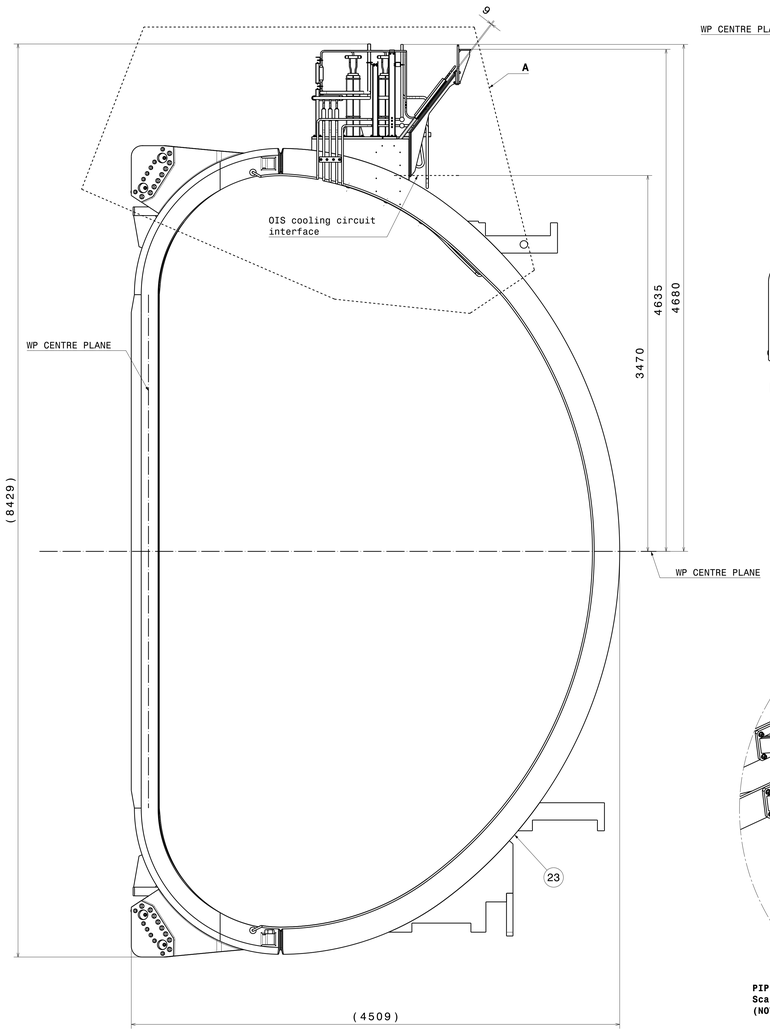

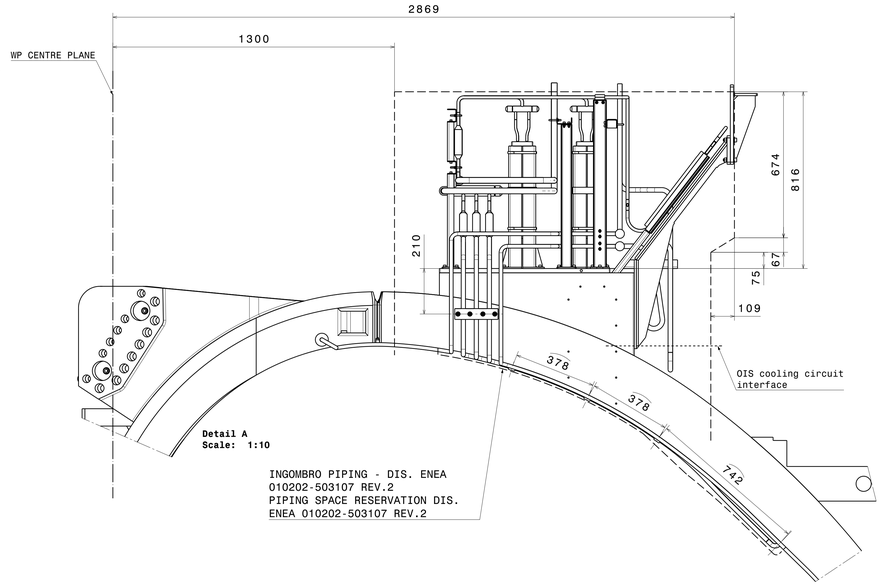

Detail A
Scale: 1:10

Isometric view
Scale: 1:10

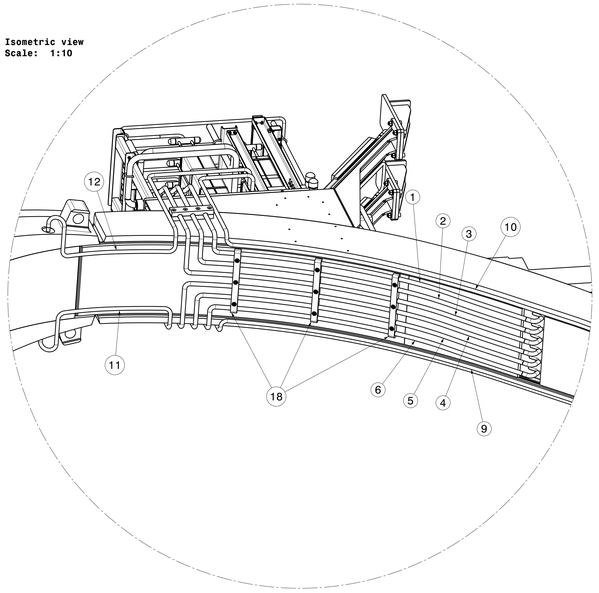

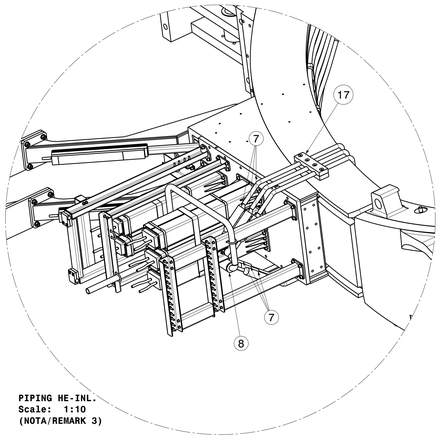

PIPING HE-INL.
Scale: 1:10
(NOTA/REMARK 3)

CASE PIPING+INTERFACE PIPE
Scale: 1:10
(NOTA/REMARK 3)

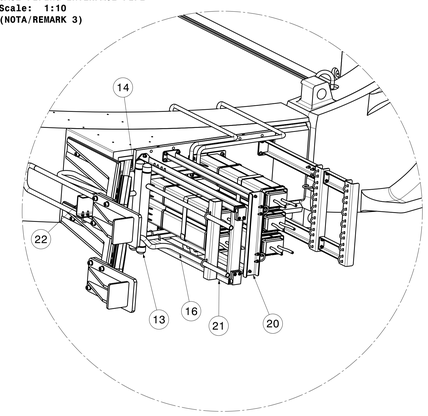

JUNCTION & TERMINATION PIPING
Scale: 1:10
(NOTA/REMARK 3)

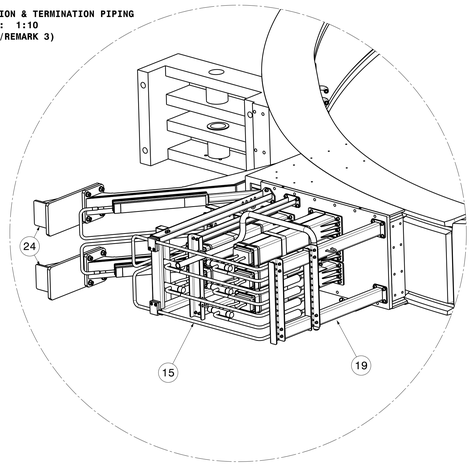

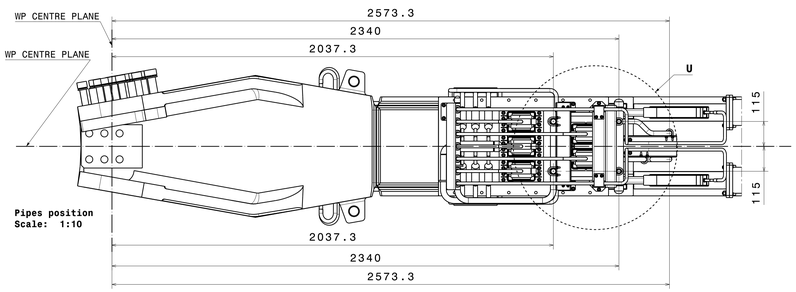

Pipes position
Scale: 1:10

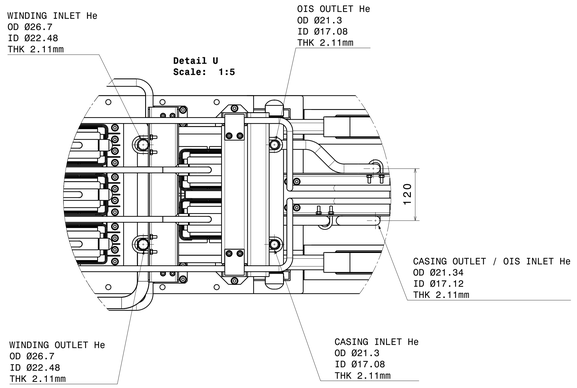

Detail U
Scale: 1:5

NOTE / REMARKS:

1) PER LE SALDATURE VEDERE 66ORM13954_F2 / FOR THE WELDS SEE 66ORM13954_F2
2) DISEGNO DI ASSIEME DI RIFERIMENTO: / REFERENCE ASSEMBLY DRAWING: 66ORM14216
3) ESEGUIRE LA SEQUENZA DI MONTAGGIO SECONDO IL SEGUENTE ORDINE: / TO DO ASSEMBLY SEQUENCE IN ACCORD WITH THE FOLLOWING LIST:
   - PIPING HE-INL.
   - CASE PIPING
   - JUNCTION&TERMINATION PIPING
   - INTERFACE PIPING
4) PRESENTARE PIPING E SUPPORTI SULL' ASSIEME, PRIMA DI EFFETTUARE TAGLI E SALDATURE DEFINITIVI / TEMPORARILY INSTALL PIPING ON THE ASSEMBLY BEFOR FINAL CUTTING AND WELDING
5) SUGLI ITEM DA 1 ÷ 6 LASCIARE LE PARETI TERMINALI PRIVE DI ISOLAMENTO (~50mm) PER ESECUZIONE SALDATURE / ON ITEM 1 ÷ 6 LEAVE THE TERMINAL ENDS FREE FROM INSULATION (~50mm) TO MAKE WELDED CONNECTION.
6) ISOLAMENTO ITEM 1 ÷ 6 E RIPRISTINI ISOLAMENTO, SPESSORE 3mm OTTENUTO MEDIANTE NASTRATURA CON NASTRO DI VETRO 0.25mm ½ SOVRAPPOSTO IMPREGNATO CON RESINA INDURENTE A T.A. / INSULATION ITEM 1 ÷ 6 AND INSULATION COMPLETION, Thk. 3mm OBTAINED BY GLASS TAPE 0.25mm HALF OVERLAPPED IMPREGNATED WITH R.T. CURING RESIN
7) L'ISOLAMENTO ELETTRICO DELLE TUBAZIONI COLLEGATE AL WP E ALLE GIUNZIONI DEVE ESTENDERSI FINO AGLI ISOLATORI / ELECTRICAL INSULATION OF THE PIPING CONNECTED TO THE WP AND TO THE JOINTS MUST BE EXTENDED UP TO THE VOLTAGE BREAKERS
8) RIVESTIRE L'ISOLAMENTO ELETTRICO DELLE TUBAZIONI CON VERNICE CONDUTTIVA VON ROLL ISOLA 8003, APPLICATA A PENNELLO IN UNICA PASSATA / COAT PIPING ELECTRICAL INSULATION WITH CONDUCTIVE VARNISH VON ROLL ISOLA 8003, LAID WITH BRUSH IN ONE SINGLE PASS

N° ITEM	QUANTITA' quantity	DEFINIZIONE definition	RIFERIMENTO reference	MATERIALE material	MASSA [kg] mass [kg]
24	2	ASM SUPPORTO TERMINAZIONI	14295		30.4
23	1	ASM WP + CASSA	13876		15703
22	1	SUPPORTO PIPING OIS	14138		1
21	1	ASM. PORTALE TERMINAZIONI	14185		7.1
20	1	ASM. PORTALE CENTRALE	14184		4.6
19	1	ASM. PORTALE	14183		4.6
18	3	ASM. BLOCCHETTO FISSAGGIO 2	14132		0.32
17	2	ASM. BLOCCHETTO FISSAGGIO 1	14131		0.73
16	1	TUBO INTERFACCIA	14133		1.45
15	1	ASM. PIPING TERM./GIUNZ.	14064		8
14	1	COLL. RAFF. CASSA 2	14126		2.9
13	1	COLL. RAFF. CASSA 1	14125		2.16
12	1	ASM TUBO CORTO RAFF. CASSA 2	14070		1.97
11	1	ASM TUBO CORTO RAFF. CASSA 1	14069		1.97
10	1	ASM TUBO LUNGO RAFF. CASSA 2	14128		9.5
9	1	ASM TUBO LUNGO RAFF. CASSA 1	14127		9.5
8	1	COLL. CIRC. HE INL	14047		3.2
7	6	INS. BREAKER	13952		
6	1	TUBO ASM DP6 HE INL	14046		1.38
5	1	TUBO ASM DP5 HE INL	14043		1.49
4	1	TUBO ASM DP4 HE INL	14040		1.55
3	1	TUBO ASM DP3 HE INL	14037		1.54
2	1	TUBO ASM DP2 HE INL	14034		1.48
1	1	TUBO ASM DP1 HE INL	14031		1.37

Approvato da ENEA / approved by ENEA

Rev rev.	Descrizione kind of revision	Preparato prepared	Controllato checked	Verificato checked	Verificato checked	Verificato checked	Approvato approved	Data date
B	Invertita pallinatura 10-9; Agg. note/Balloon 10-9 inverted; Upd.rem.	Trasino	Cuneo	Valle	Pesenti		Drago	13/02/2013
A	Agg. ITEM, note e quote / Update ITEM, remarks and dim.	Trasino	Cuneo	Valle	Pesenti		Drago	19/11/2012
0	Prima emissione / First issue	Trasino	Cuneo	Valle	Pesenti		Drago	14/09/2012

Progetto/project	Cliente/client	Materiale/Material	Quantità/Quantity	Massa/Mass [kg]
JT60 SA	ENEA	---	1	15773

Commessa job no.	Emittente issued by	Form. size	Scala scale	Derivato da derived from	Rev. rev.
2053	DIS	A0	1:10		

ASG

Informazioni strettamente riservate, di proprietà ASG Superconductors S.p.A., da non utilizzare per scopi diversi da quelli per cui sono state fornite.

Confidential information, property of ASG Superconductors S.p.A. to be used for any purpose other than that for which it is supplied.

Titolo title

ASM BOBINA + PIPING (MONTAGGIO E INGOMBRI) - COIL + PIPING ASS.LY (INTEGRATION & DIMENSIONS)

Identificativo/document no.: 66ORM13945 DD-JT60TF-ASG-13945

Rev./rev.	Foglio sheet	Segue fg. foll. sheet	Di of
0 A B	1	2	2

13945Rev.0.CATDrawing

Identificazione file file identification

Simboli di rugosita' secondo ISO 1302 — Symbols for roughness according to ISO 1302

Collaranze di forma e di posizione sec. ISO 2768/2 — Shape and position tolerances according to ISO 2768/2

Quote di lavorazione senza indicazione di tolleranza secondo ISO 2768/1 — Tolerances for non-limited dimensions for machining according to ISO 2768/1

Classi di tolleranza mK ☒ — Deviations grade fK ☐

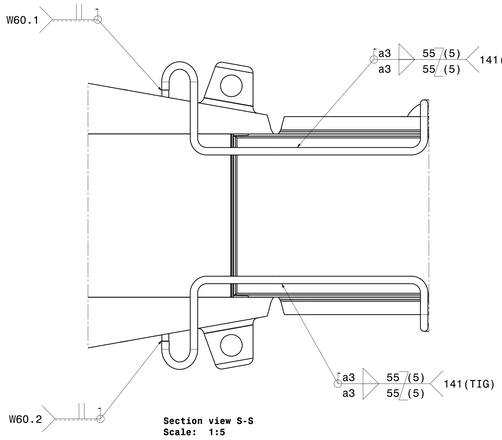

Section view S-S
Scale: 1:5

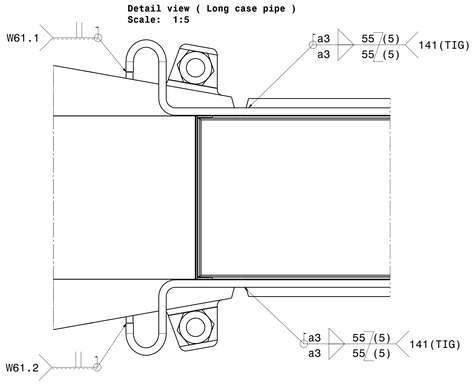

Detail view (Long case pipe)
Scale: 1:5

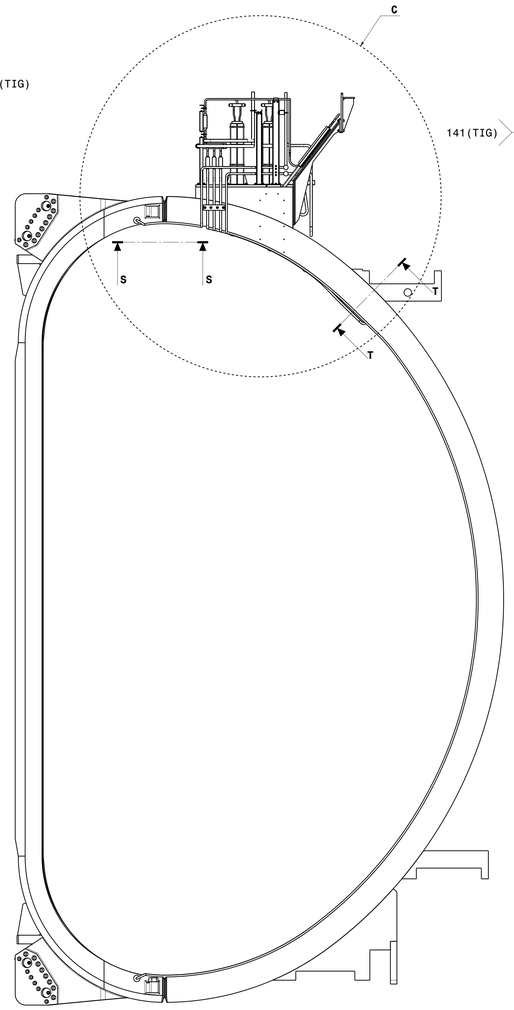

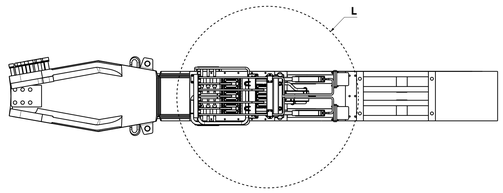

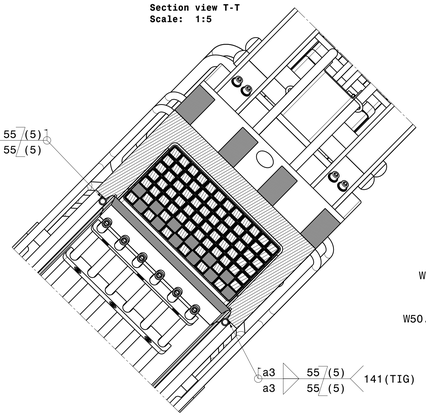

Section view T-T
Scale: 1:5

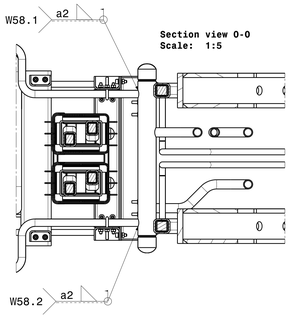

Section view O-O
Scale: 1:5

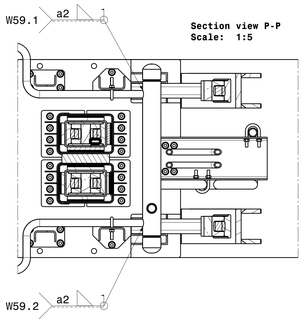

Section view P-P
Scale: 1:5

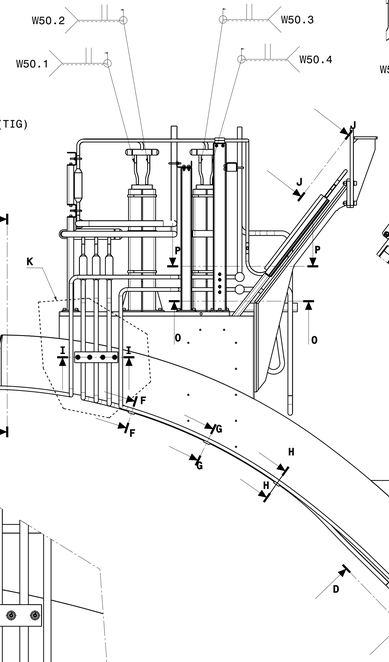

Detail C
Scale: 1:10

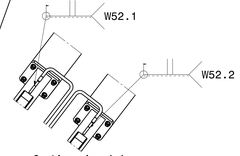

Section view J-J
Scale: 1:10

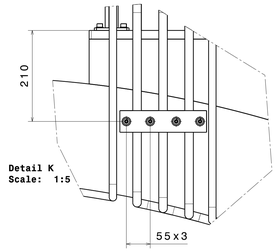

Detail K
Scale: 1:5

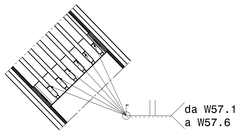

Section view D-D
Scale: 1:10
(Senza isolamento tubi -
Without piping insulation)

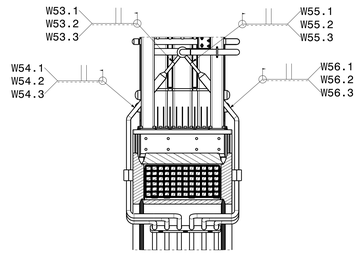

Section view E-E
Scale: 1:10
(Senza isolamento tubi He-inl. e tubi cassa -
Without pipe insulation and case pipes)

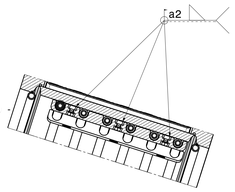

Section view F-F
Scale: 1:5
(Saldature viti su cassa -
Screws on case welds)

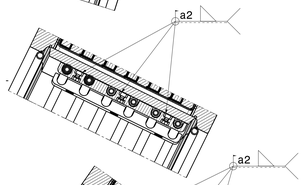

Section view G-G
Scale: 1:5
(Saldature viti su cassa -
Screws on case welds)

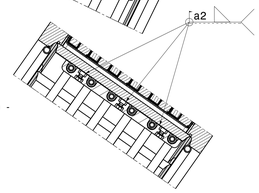

Section view H-H
Scale: 1:5
(Saldature viti su cassa -
Screws on case welds)

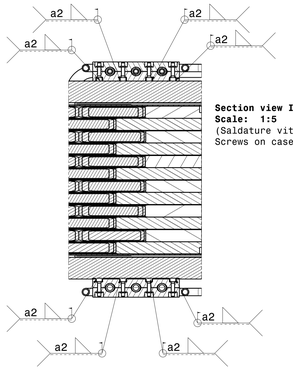

Section view I-I
Scale: 1:5
(Saldature viti su cassa -
Screws on case welds)

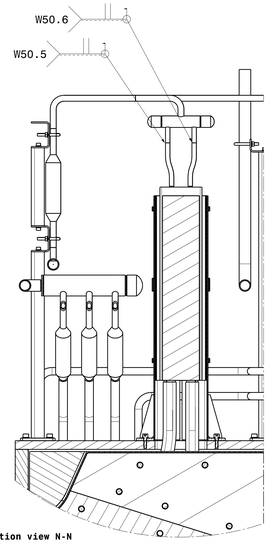

Section view N-N
Scale: 1:5

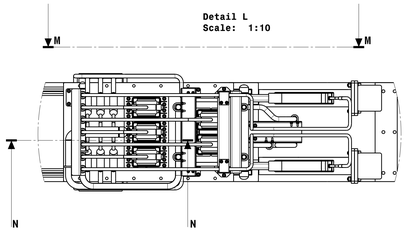

Detail L
Scale: 1:10

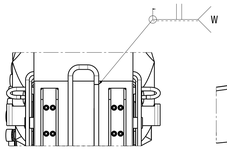

Section view Q-Q
Scale: 1:10

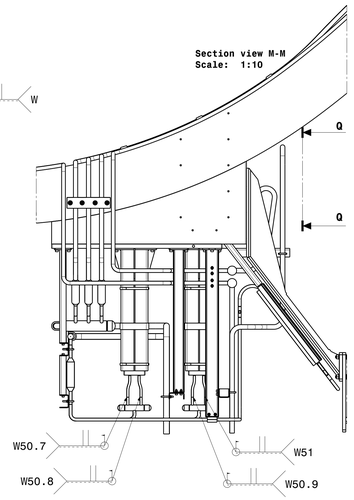

Section view M-M
Scale: 1:10

NOTE / REMARKS:
1) DISEGNO DI ASSIEME DI RIFERIMENTO: / REFERENCE ASSEMBLY DRAWING:
660RM14216

Rev. rev.	Descrizione kind of revision	Preparato prepared	Controllato checked	Verificato checked	Verificato checked	Verificato checked	Approvato approved	Data date
		Approvato da ENEA / approved by ENEA						
B	Agg. saldature tubi raffreddamento / Upd. cooling pipes welds		Trasino	Cuneo	Valle	Pesenti	Drago	13/02/2013
A	Agg. ITEM, note e quote / Update ITEM, remarks and dim.		Trasino	Cuneo	Valle	Pesenti	Drago	09/11/2012
0	Prima emissione / First issue		Trasino	Cuneo	Valle	Pesenti	Drago	17/09/2012

Progetto/project	Cliente/client	Materiale/Material	Quantità/Quantity	Massa/Mass [kg]
JT60 SA	ENEA	---	1	--- Kg

Commessa job no.	Emittente issued by	Form. size	Scala scale	Derivato da derived from	Rev. rev.
2053	DIS	A0	1:10		B

ASG

Informazioni strettamente riservate, di proprieta' ASG Superconductors S.p.A., da non utilizzare per scopi diversi da quelli per cui sono state fornite.

Confidential information, property of ASG Superconductors S.p.A., not to be used for any purpose other than that for which it is supplied.

Titolo title: **ASM BOBINA + PIPING (SALDATURE) - COIL + PIPING ASS.LY (WELDS)**

Identificativo/document no.: 660RM13945 DD-JT60TF-ASG-13945

Rev./rev.	Foglio sheet	Segue fg. foll. sheet	Di of
0 A B	2	-	2

Identificazione file file identification: 13945Rev.0.CATDrawing

Simboli di rugosita' secondo ISO 1302	Tolleranze di forma e di posizione sec. ISO 2768/2	Quote di lavorazione senza indicazione di tolleranza secondo ISO 2768/1	Classi di tolleranza mK ☒
Symbols for roughness according to ISO 1302	Shape and position tolerances according to ISO 2768/2	Tolerances for non-limited dimensions for machining according to ISO 2768/1	Deviations grade fH ☐

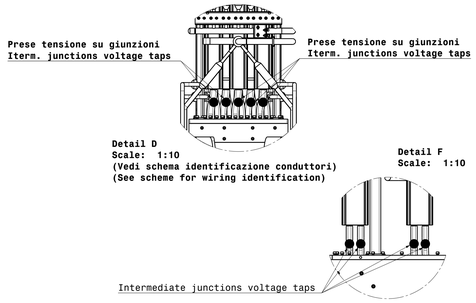

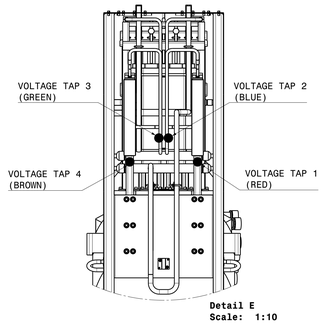

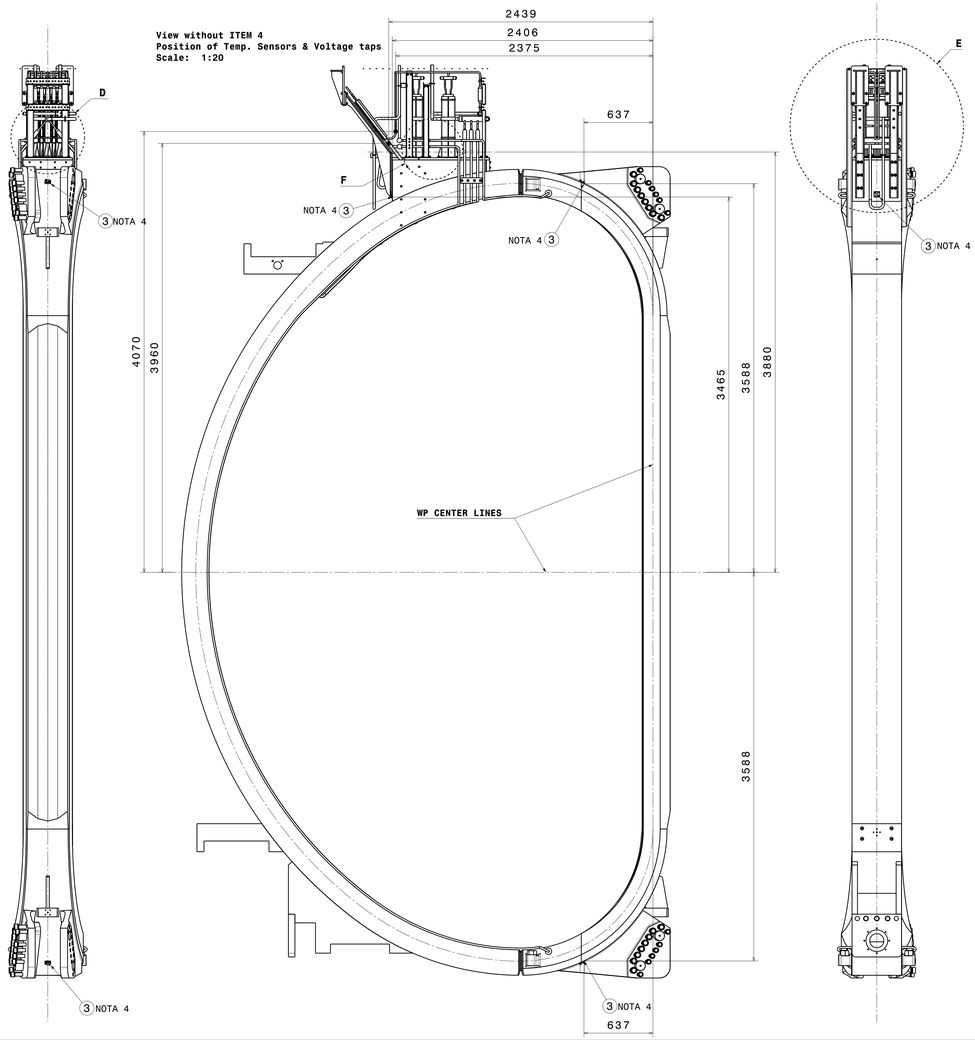

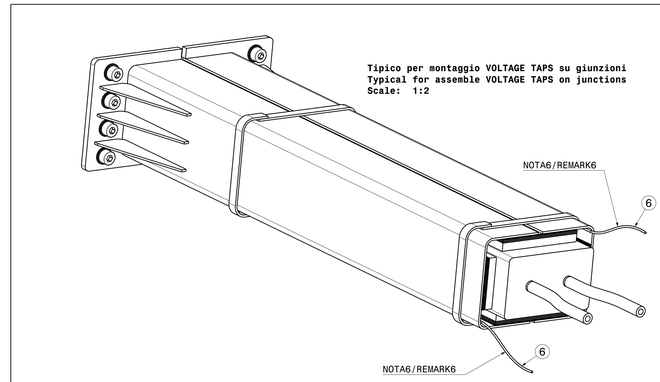

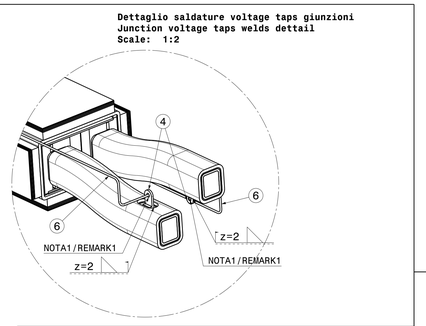

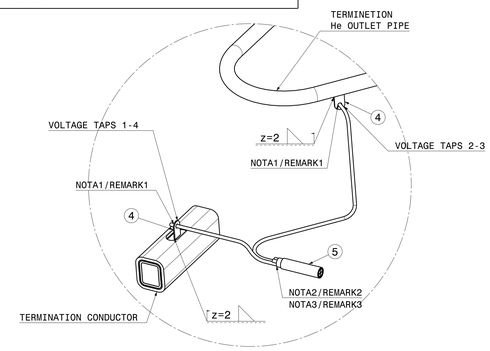

Tipico per montaggio VOLTAGE TAP su terminazioni
Typical for assemble VOLTAGE TAP on terminations
Scale: 1:2

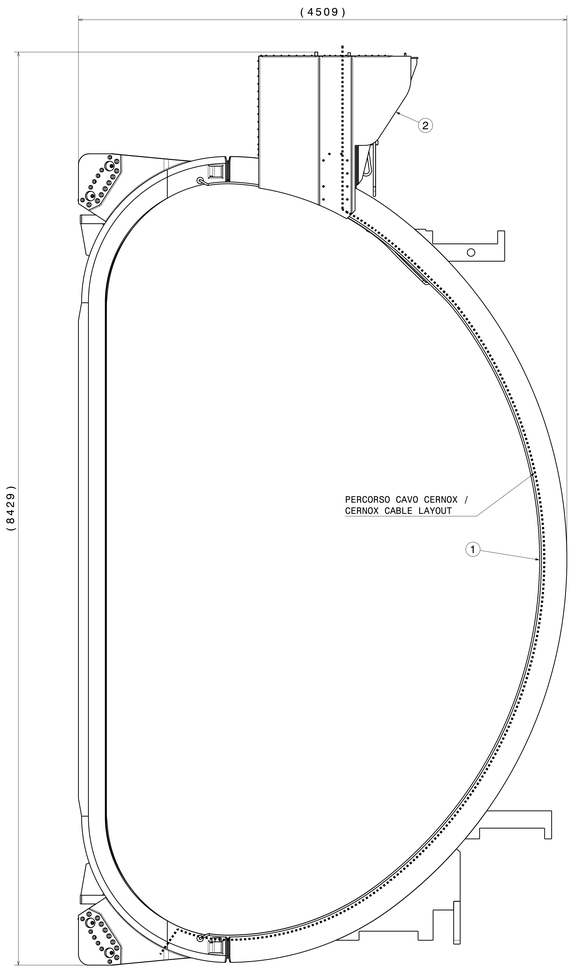

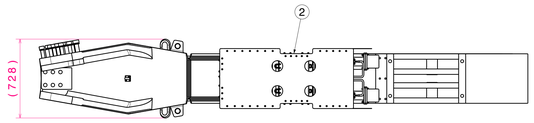

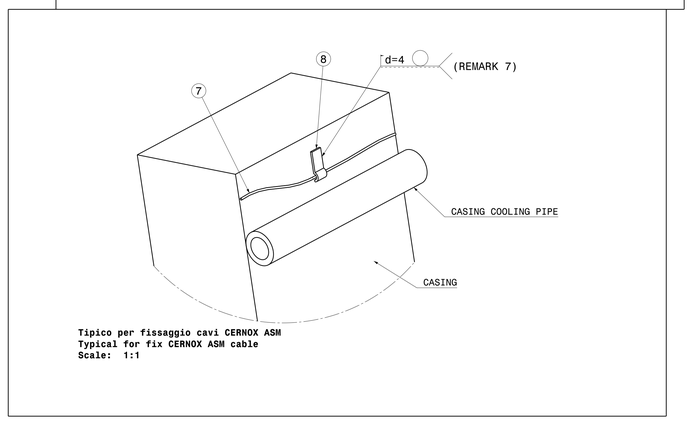

Tipico per fissaggio cavi CERNOX ASM
Typical for fix CERNOX ASM cable
Scale: 1:1

NOTE / REMARKS :

1) BRASARE IL TERMINALE DEL CAVO ALLA PIASTRINA ITEM 4 CON LEGA Sn/Ag ; APRIRE LOCALMENTE L'ISOLAMENTO PER ESEGUIRE LA SALDATURA, E RIPRISTINARE AD OPERAZIONE ESEGUITA / BRAZE CONDUCTOR END TO PLATE ITEM 4 WITH Sn/Ag ALLOY ; LOCALLY OPEN GROUND INSULATION TO WELD, AND RESTORE IT AFTER OPERATION HAS BEEN COMPLETED
2) CAVO A 4 CONDUTTORI PER PRESE DI TENSIONE 1-2-3-4 / 4 WIRES CABLE FOR VOLTAGE TAPS 1 TO 4
3) AVVOLGERE TEMPORANEAMENTE CAVO IN ECCESSO IN MATASSA / TEMPORARILY WIND IN A SPOOL CABLE IN EXCESS
4) MONTAGGIO ITEMS 3 : VEDI ISTRUZIONI SU DISEGNO 14026 / ITEMS 3 ASSEMBLY: SEE DIRECTIONS ON DRAWING 14026
5) MONTAGGIO VOLTAGE TAPS SU GIUNZIONI: VEDI SCHEMA PER IDENTIFICAZIONE CONDUTTORI / INTERMEDIATE JUNCTION VOLTAGE TAPS INSTALLATION : SEE SCHEME FOR WIRING IDENTIFICATION
6) 10 m DI CAVO PER VOLTAGE TAP; AVVOLGERE CAVO IN ECCESSO TEMPORANEAMENTE / 10 m CABLE FOR ONE VOLTAGE TAP; TEMPORALLY WIND CABLE IN EXCESS
7) PUNTARE ALLA CASSA OGNI 300 mm / TACK WELD TO THE CASING EVERY 300mm

SCHEMA IDENTIFICAZIONE CONDUTTORI /
SCHEME FOR WIRING IDENTIFICATION

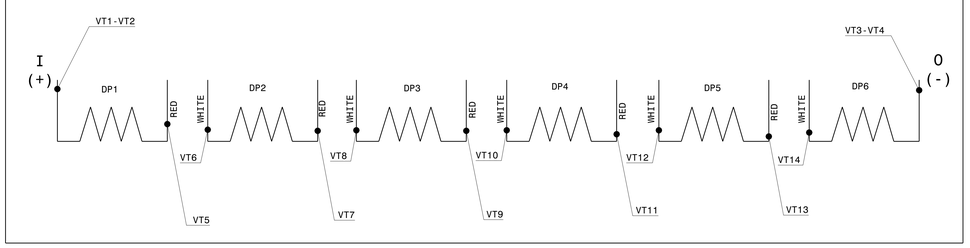

8	NOTA 7	GRAFFETTA DIAM.7-8 L.20 Sp.1,2	(GP INOX GRA/PO3-08)	AISI 304 L		
7	80 m	CAVO (CERNOX) TWISTATO A 2 COPPIE	AXON ET2607 BARE CU			
6	100 m	CAVO (VOLTAGE TAP GIUNZIONI)	AXON EE2019 KZ 06-07			
5	20 m	CAVO (VOLTAGE TAP TERMINAZIONI)	NISSEI Electric NSP-9-13412			
4	14	PIASTRINA SALDATA	14325		0.03	
3	3	CERNOX SUPPORT ASSEMBLY	14026			
2	1	PIPING COVER	14324		55.1	
1	1	ASM BOBINA + PIPING	13945		15773	
N° ITEM	QUANTITA' quantity	DEFINIZIONE definition	RIFERIMENTO reference	MATERIALE material	MASSA [kg] mass [kg]	

Approvato da ENEA / approved by ENEA

rev.	st. sc. / st. sc.	Descrizione revisione / Revision description	Preparato / Prepared	Controllato / Checked	Verificato / Verified	Verificato / Verified	Verificato / Verified	Approvato / Approved	Data / Date
A		Agg. posizioni ITEMS 3 / Update positions of ITEMS 3	Trasino	Cuneo	Valle	Pesenti		Drago	11/03/2013
0		Prima Emissione / First Issue	Trasino	Cuneo	Valle	Pesenti		Drago	12/12/2012

progetto/project	cliente/client	materiale/material	quantità/quantity	massa/mass [kg]
JT60 SA	ENEA	- - -	1	15830

commessa n° job n°	emittente issued by	formato size	scala scale	derivato da derived from	rev.
2053	DIS	A0	1:20		

ASG

Informazioni strettamente riservate, di proprietà ASG Superconductors S.p.A., da non utilizzare per scopi diversi da quelli per cui sono state fornite.

Confidential information, property of ASG Superconductors S.p.A., to be used for any purpose other than that for which it is supplied.

titolo / title: **ASM BOBINA + PIPING + STRUMENTI - COIL + PIPING + INSTRUMENTS ASS.LY**

Identificazione file / File identification: 14216Rev.0.CATDrawing

Identificativo/document no.: 660RM14216 DD-JT60TF-ASG-14216

rev.	rev.	foglio / sheet	segue fg. / foll. sheet	di / of
0 A		1	-	1

Simboli di rugosità secondo ISO 1302:2002	Tolleranze di forma e di posizione sec. ISO 2768-2:1989	Quote di lavorazione senza indicazione di tolleranza secondo ISO 2768-1:1989	Classi di tolleranza mK ☒
Symbols for roughness according to ISO 1302:2002	Shape and position tolerances according to ISO 2768-2:1989	Tolerances for non-limited dimensions for machining according to ISO 2768-1:1989	Deviations grade fK ☐

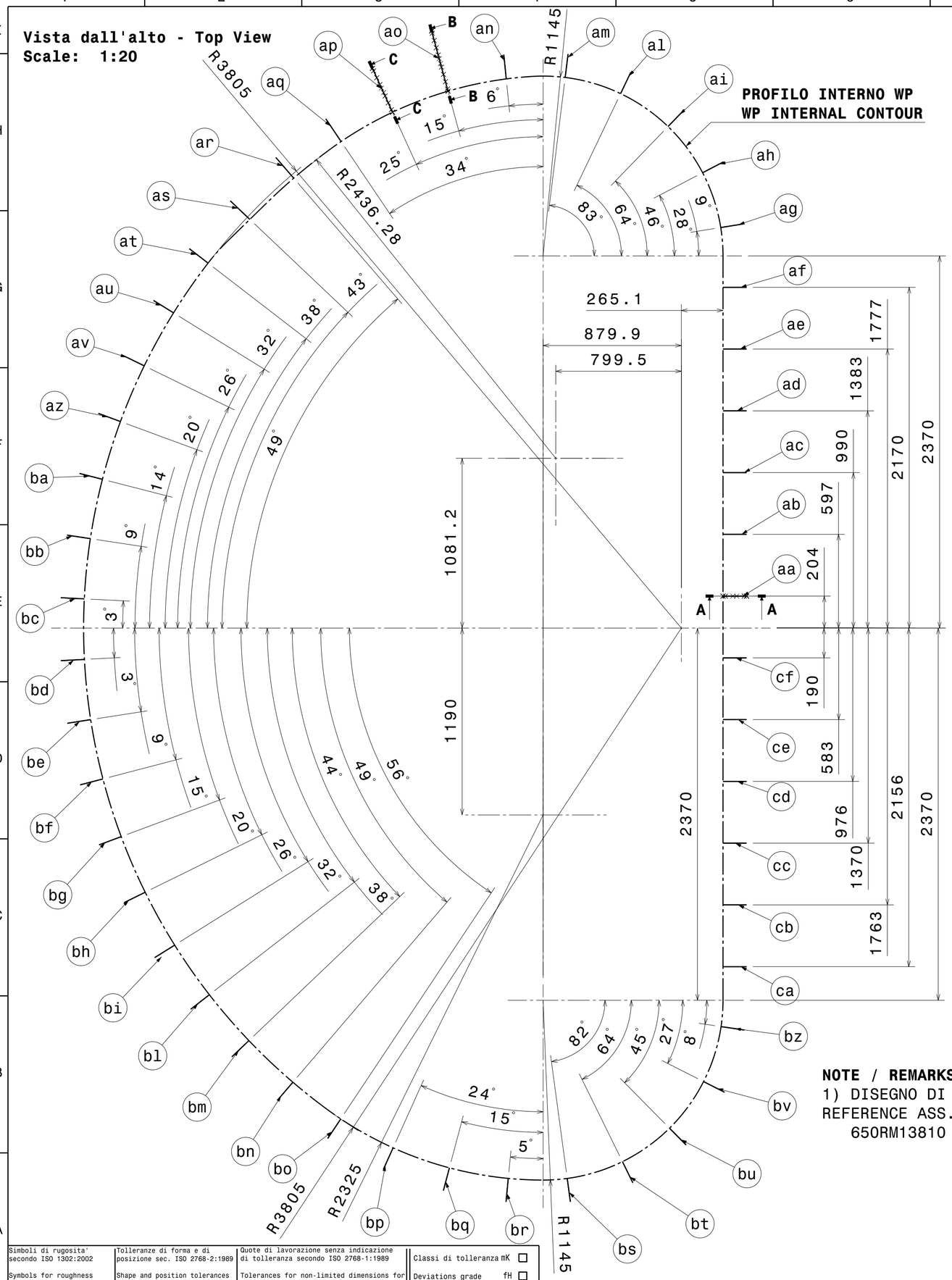

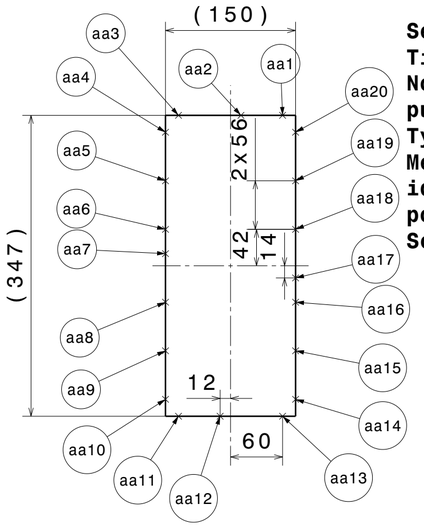

Sezione / Section cut A-A
Tipico
Nomenclatura e posizione punti rilevati
Typical
Measured points identification and position
Scale: 1:5

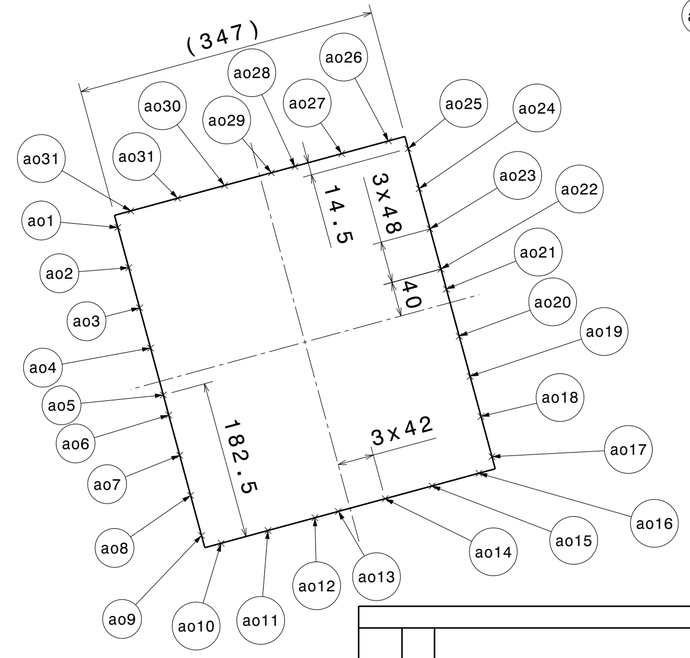

Sezione / Section cut B-B
Nomenclatura e posizione punti rilevati
Measured points identification and position
Scale: 1:5

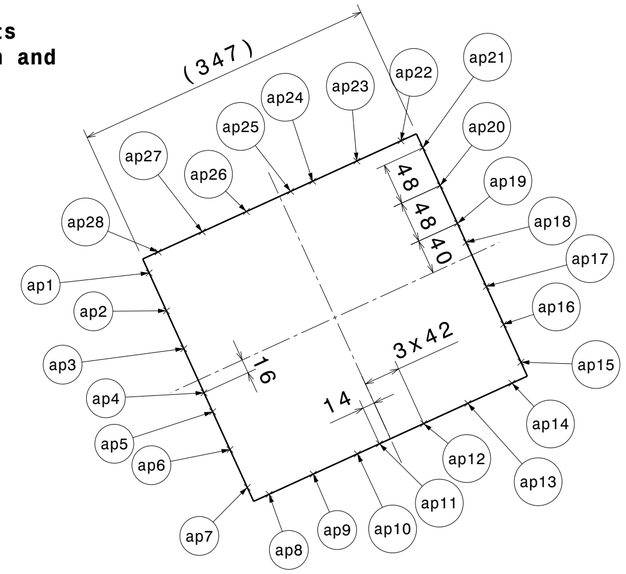

Sezione / Section cut C-C
Nomenclatura e posizione punti rilevati
Measured points identification and position
Scale: 1:5

NOTE / REMARKS:
1) DISEGNO DI ASSIEME DI RIFERIMENTO: / REFERENCE ASS.LY DRAWING:
650RM13810

Simboli di rugosita' secondo ISO 1302:2002 / Symbols for roughness according to ISO 1302:2002	Tolleranze di forma e di posizione sec. ISO 2768-2:1989 / Shape and position tolerances according to ISO 2768-2:1989	Quote di lavorazione senza indicazione di tolleranza secondo ISO 2768-1:1989 / Tolerances for non-limited dimensions for machining according to ISO 2768-1:1989	Classi di tolleranza mK ☐ / Deviations grade fH ☐

Approvato da ENEA / approved by ENEA

Rev rev.	St. st.	Sc. sc.	Descrizione kind of revision	Preparato prepared	Controllato checked	Verificato checked	Verificato checked	Verificato checked	Approvato approved	Data date
A			Agg. nomi punti e sezioni / Upd. sections and points name	Trasino	Cuneo	Valle	Barutti		Drago	07/03/2013
0			Prima emissione / First issue	Trasino	Cuneo	Valle	Barutti		Drago	16/01/13

Identificazione File / file identification: 14351Rev.0.CATDrawing

Progetto/project	Cliente/client	Materiale/Material	Quantità/Quantity	Massa/Mass [kg]
JT60 SA	ENEA	-----	-	---

Commessa job no.	Emittente issued by	Form. size	Scala scale	Derivato da derived from	Rev. rev.
2053	DIS	A2	1:5 1:20		

ASG Superconductors

Informazioni strettamente riservate, di proprieta` ASG Superconductors S.p.A., da non utilizzare per scopi diversi da quelli per cui sono state fornite.

Confidential information, property of ASG Superconductors S.p.A., not to be used for any porpose other than that for which it is supplied.

Titolo / title

MAGLIA RILIEVI DIMENSIONALI WP
WP DIMENSIONAL SURVEY WEB

1

Identificativo/document no.: 650RM14351
DD-JT60TF-ASG-14351

Rev./rev.	Foglio sheet	Segue fg. foll. sheet	Di of
0 A	1	-	1

VISTA DALL' ALTO
-
TOP VIEW
Scale: 1:20

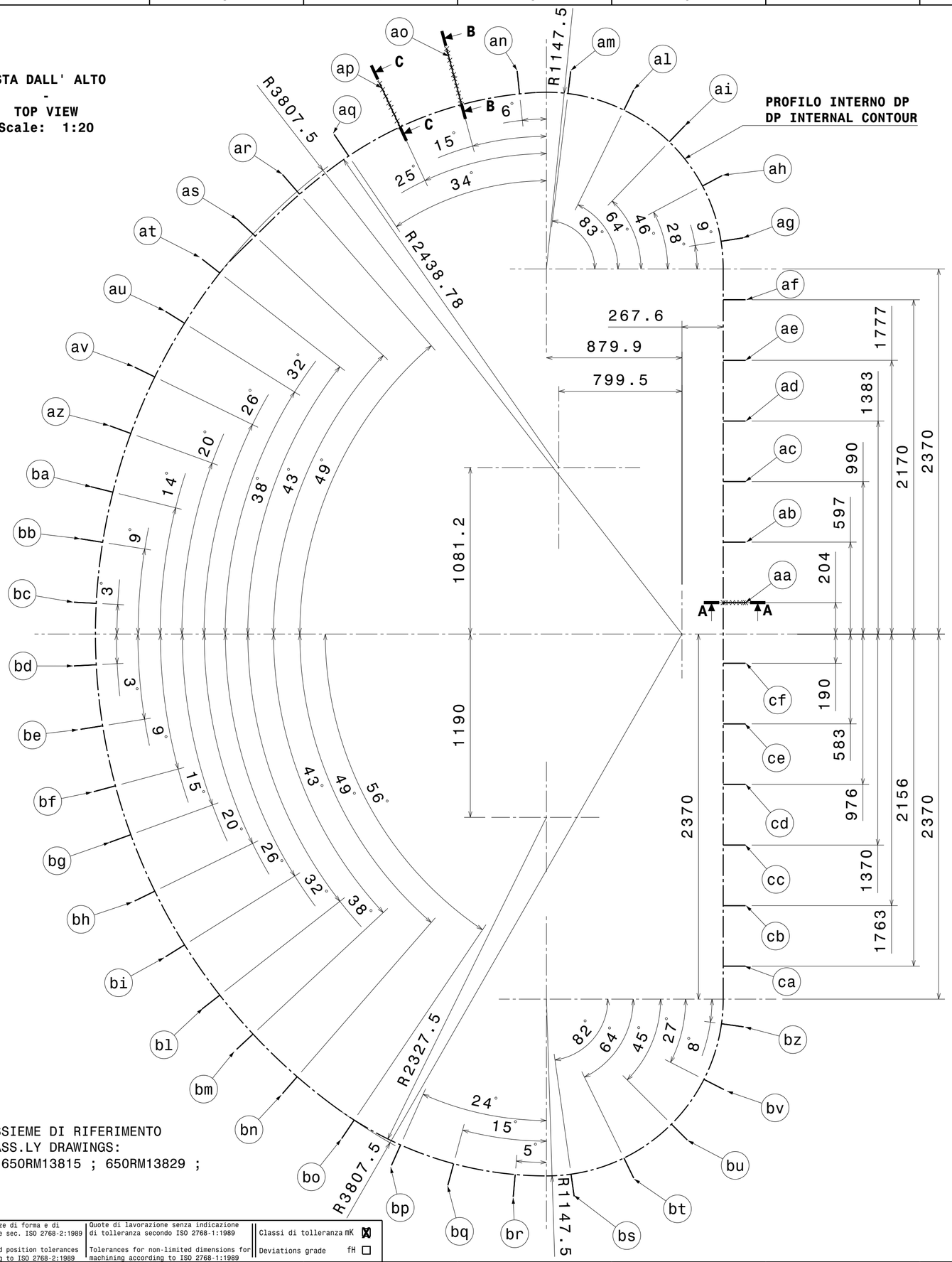

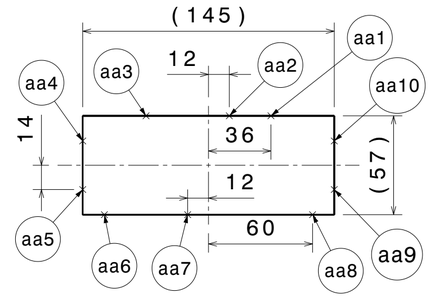

Sezione / Section cut A-A
Tipico
Nomenclatura e posizione
punti rilevanti
Typical
Measured points
identification and psition
Scale: 1:2.5

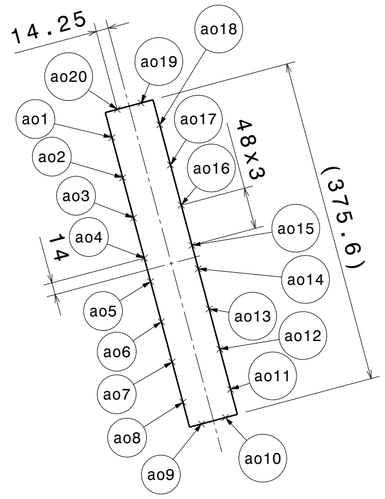

Sezione / Section cut B-B
Nomenclatura e posizione
punti rilevanti
Typical
Measured points
identification and psition
Scale: 1:5

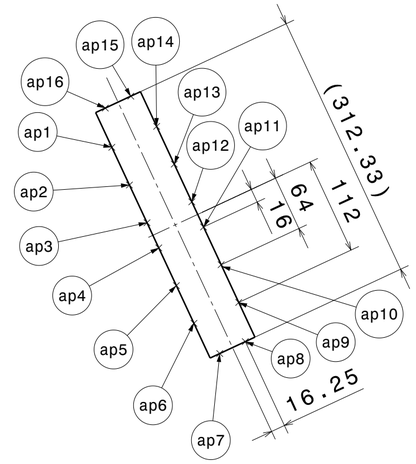

Sezione / Section cut C-C
Nomenclatura e posizione
punti rilevanti
Typical
Measured points
identification and psition
Scale: 1:5

NOTE / REMARKS:
1) DISEGNI DI ASSIEME DI RIFERIMENTO
/ REFERENCE ASS.LY DRAWINGS:
650RM13795 ; 650RM13815 ; 650RM13829 ;
650RM13839 .

Simboli di rugosita' secondo ISO 1302:2002 / Symbols for roughness according to ISO 1302:2002	Tolleranze di forma e di posizione sec. ISO 2768-2:1989 / Shape and position tolerances according to ISO 2768-2:1989	Quote di lavorazione senza indicazione di tolleranza secondo ISO 2768-1:1989 / Tolerances for non-limited dimensions for machining according to ISO 2768-1:1989	Classi di tolleranza mK ☒ / Deviations grade fH ☐

Approvato da ENEA / approved by ENEA

Rev rev.	St. st.	Sc. sc.	Descrizione kind of revision	Preparato prepared	Controllato checked	Verificato checked	Verificato checked	Verificato checked	Approvato approved	Data date
0			Prima emissione / First issue	Trasino	Cuneo	Valle	Barutti		Drago	26/03/2013

Progetto/project	Cliente/client	Materiale/Material	Quantità/Quantity	Massa/Mass [kg]
JT60 SA	ENEA	-----	--	---

Commessa job no.	Emittente issued by	Form. size	Scala scale	Derivato da derived from	Rev. rev.
2053	DIS	A2	1:20		

ASG Superconductors

Informazioni strettamente riservate, di proprieta' ASG Superconductors S.p.A., da non utilizzare per scopi diversi da quelli per cui sono state fornite.

Confidential information, property of ASG Superconductors S.p.A., not to be used for any porpose other than that for which it is supplied.

Titolo
title

MAGLIA RILIEVI DIMENSIONALI DP
-
DP DIMENSIONAL SURVEY WEB

1

Identificativo/document no.
650RM14501
DD-JT60TF-ASG-14501

Rev./rev.	Foglio sheet	Segue fg. foll. sheet	Di of
0	1	-	1

Identificazione file
file identification
14501Rev.0.CATDrawing

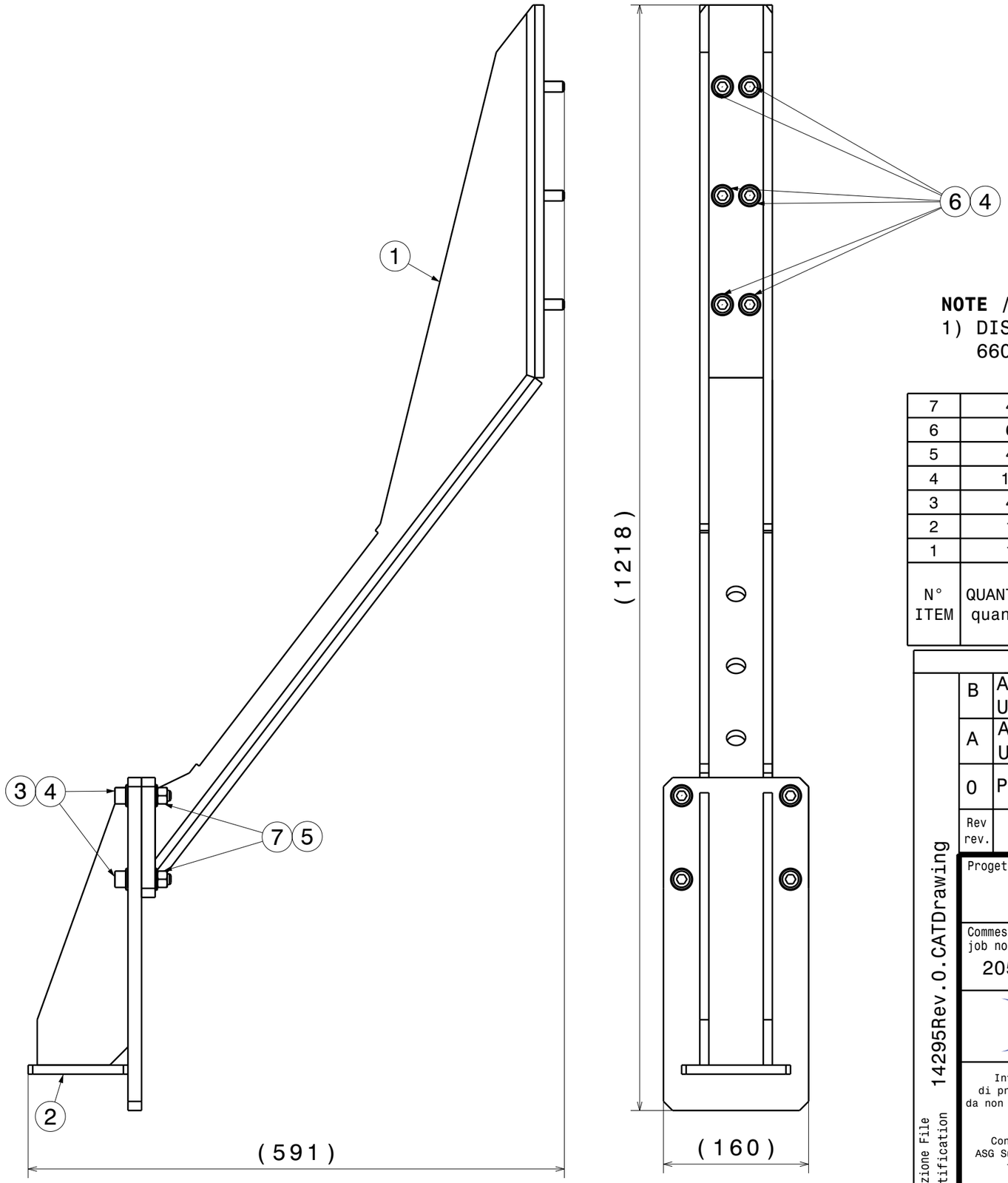

NOTE / REMARKS:

1) DISEGNO DI ASSIEME DI RIFERIMENTO: / REFERENCE ASSEMBLY DRAWING: 660RM13945

N° ITEM	QUANTITA' quantity	DEFINIZIONE definition	RIFERIMENTO reference	MATERIALE material	MASSA [kg] mass [kg]
7	4	RONDELLA 12x24	ISO 7089	A4	
6	6	VITE M12x35	ISO 4762	A4	
5	4	DADO M12	ISO 4032	A4	
4	10	RONDELLA GROWER d13	UNI 1751	A4	
3	4	VITE M12x50	ISO 4762	A4	
2	1	SUPP. TERMINAZIONI- COLLEGAMENTO	14288		11
1	1	SUPPORTO TERMINAZIONI	14284		18.7

Approvato da ENEA / approved by ENEA

Rev rev.	Descrizione kind of revision	Preparato prepared	Controllato checked	Verificato checked	Verificato checked	Verificato checked	Approvato approved	Data date
B	Aggiornata quota 1218 / Update dimension 1218	Trasino	Cuneo	Valle			Drago	06/02/2013
A	Aggiornata quota 1219 / Update dimension 1219	Trasino	Cuneo	Valle			Drago	15/01/2013
0	Prima emissione / First issue	Trasino	Cuneo	Valle			Drago	19/11/2012

Identificazione File / file identification: 14295Rev.0.CATDrawing

Progetto/project	Cliente/client	Materiale / Material	Quantità/Quantity	Massa/Mass [kg]
JT60 SA	ENEA	---	1	30.4 Kg

Commessa job no.	Emittente issued by	Form. size	Scala scale	Derivato da derived from	Rev. rev.
2053	DIS	A3	1:5		0

ASG Superconductors

Informazioni strettamente riservate, di proprieta` ASG Superconductors S.p.A., da non utilizzare per scopi diversi da quelli per cui sono state fornite.

Confidential information, property of ASG Superconductors S.p.A., not to be used for any porpose other than that for which it is supplied.

Titolo / title

ASM SUPPORTO TERMINAZIONI - TERMINATIONS SUPPORT ASS.LY

Identificativo/document no.
662RM14295
DD-JT60TF-ASG-14295

Rev./rev.	Foglio sheet	Segue fg. foll. sheet	Di of
0 A B	1	-	1

Simboli di rugosita' secondo ISO 1302:2002 / Symbols for roughness according to ISO 1302:2002	Tolleranze di forma e di posizione sec. ISO 2768-2:1989 / Shape and position tolerances according to ISO 2768-2:1989	Quote di lavorazione senza indicazione di tolleranza secondo ISO 2768-1:1989 / Tolerances for non-limited dimensions for machining according to ISO 2768-1:1989	Classi di tolleranza mK ☒ / Deviations grade fH ☐